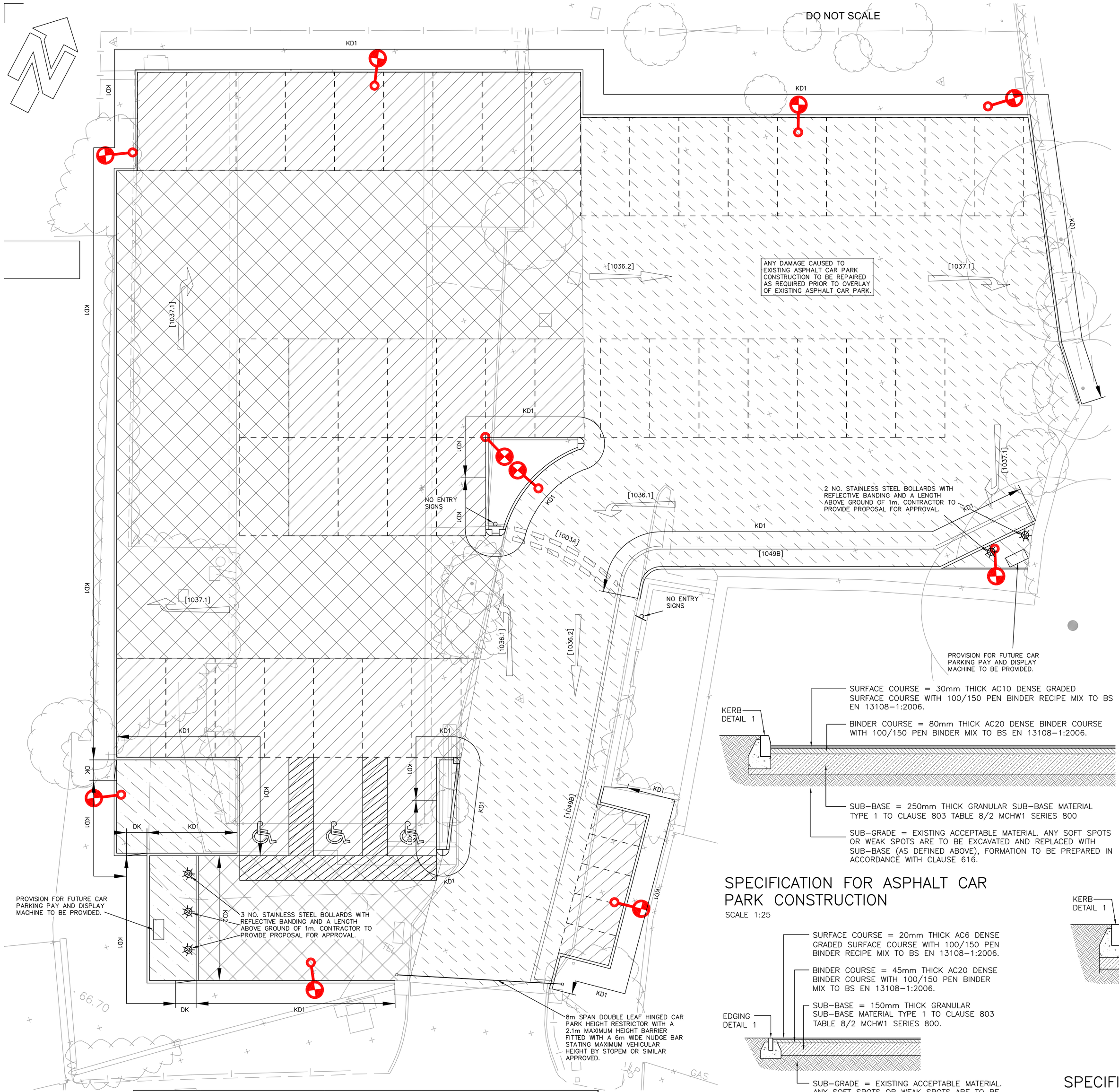


| ROAD MARKINGS SCHEDULE | | | | |
|---|---|---|---|---|
| DIAGRAM NUMBER TSRGD (2016) | DESCRIPTION | MARK LENGTH (mm) | GAP LENGTH (mm) | LINE WIDTH (mm) |
| 1036.1 | TURN LEFT ARROW | 4000 | N/A | N/A |
| 1036.2 | STRAIGHT AHEAD ARROW | 4000 | N/A | N/A |
| 1037.1 | TURN RIGHT ARROW | 4000 | N/A | N/A |
| 1049B | PEDESTRIAN REFUGE | N/A | N/A | 150 |
| 1003A | GIVE WAY MARKINGS | 600 | 300 | 200 |

## EXTERNAL FINISHES

- DENOTES EXTENT OF NEW ASPHALT CAR PARK CONSTRUCTION
- DENOTES EXTENT OF ASPHALT FOOTPATH CONSTRUCTION
- DENOTES EXTENT OF NEW OVERLAY CONSTRUCTION ON TOP OF EXISTING ASPHALT
- DENOTES EXTENT OF NEW HEAVY DUTY ASPHALT CIRCULATION AREAS
- KD1 — NEW 125 x 255 PRECAST CONCRETE HALF BATTERED KERB (TYPE HB2) WITH A 125mm UPSTAND. (KERB DETAIL 1)
- KD2 — NEW 125 x 150 PRECAST CONCRETE BULLNOSED KERB (TYPE BN) WITH A 0 TO 5mm UPSTAND. (KERB DETAIL 2)
- EF — NEW EDGING FLUSH
- DK — NEW DROPPER KERB INSTALLED BETWEEN KERB DETAIL 1 AND KERB DETAIL 2.
- DENOTES POSITION OF PROPOSED STAINLESS STEEL BOLLARD
- DENOTES POSITION OF PROPOSED STREET LIGHTING COLUMN

## EXTERNAL FINISHES NOTES

1. This drawing to be read in conjunction with all relevant Architects, Engineers and Subcontractors drawings and details.
2. This drawing is based on topographical survey by Total Survey Solutions:

   Drawing Number **4366/10/001**
   Dated **19.04.18**
3. Unless noted otherwise, clauses refer to The Specification for highway Works: Volume 1 of the Manual of Contract Documents for Highway Works.
4. Refer to Architects drawings for details of all paving types & patterns, soft landscaping, fences, gates & bollards.
5. If surface course is not constructed within 3 days of base course must be cleaned and tack coated prior to laying.
6. Carriageway constructions is based on an assumed CBR value of **5.0%** in accordance with results found in Site Investigation **CRM.1542.001.GE.R.001.A** by **Enzygo, April 2018.**

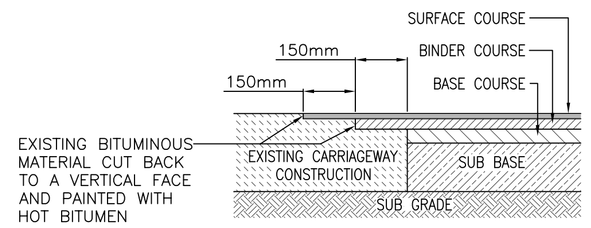


## STAGGERED JOINT BETWEEN NEW AND EXISTING CAR PARK CONSTRUCTION

SCALE 1:25

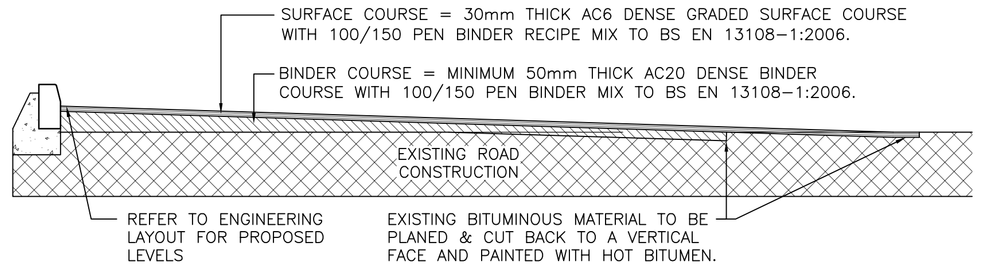


## SPECIFICATION FOR OVERLAY OF EXISTING CAR PARK

SCALE 1:25




## SPECIFICATION FOR ASPHALT CAR PARK CONSTRUCTION

SCALE 1:25

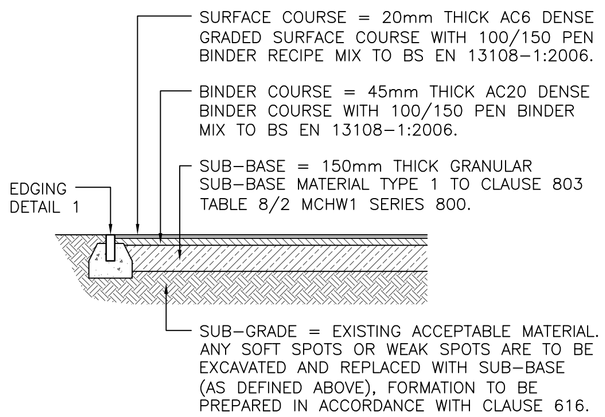


## SPECIFICATION FOR NEW ASPHALT FOOTPATH

SCALE 1:25

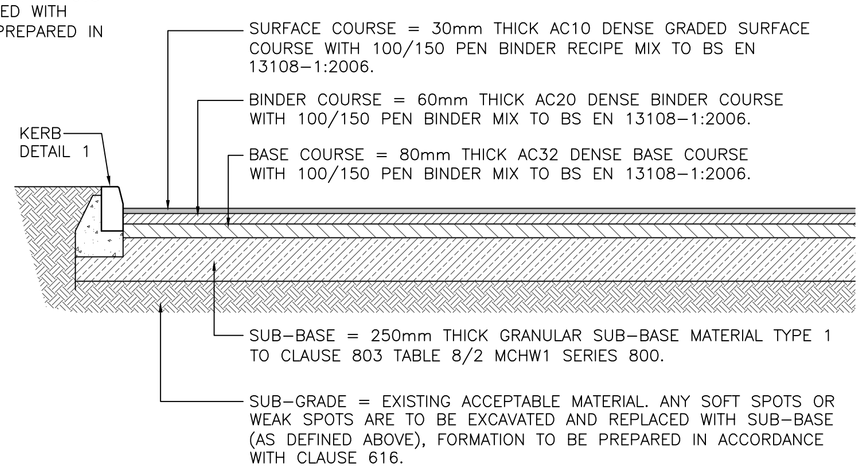


## SPECIFICATION FOR NEW HEAVY DUTY ASPHALT CIRCULATION AREAS

SCALE 1:25

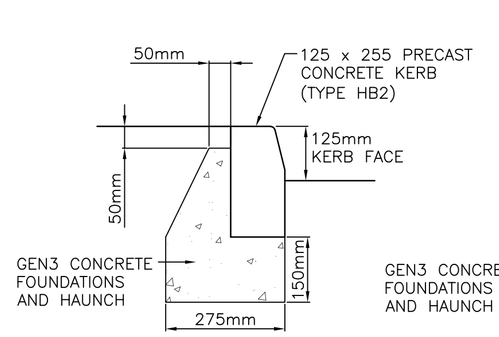


## KERB DETAIL 1

SCALE 1:10

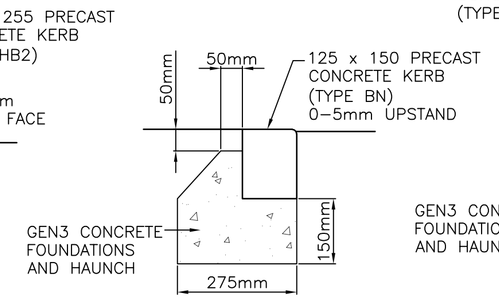


## KERB DETAIL 2

SCALE 1:10

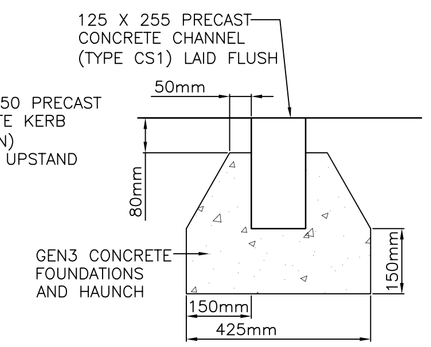


## KERB DETAIL 3

SCALE 1:10

| MK | REVISION | BY | DATE |
|---|---|---|---|

DRAWING STATUS

TENDER

DRAWING TITLE

SURFACE FINISHES PLAN & DETAILS

PROJECT — Project Number P18-135

PROPOSED CAR PARK
RELIANCE HOUSE
DURSLEY

simpson
Unit B10
Elmbridge Court Business Park
Gloucester GL3 1JZ
T.01452 309 727
London, Henley-on Thames and Gloucester

| Drawn | Ch'kd | Scales | Date |
|---|---|---|---|
| EL | ADC | 1:100 @ A1 | MAY 2018 |

Purpose of Issue: TENDER

Drawing Number: P18-135 - 102

Revision: -

A1