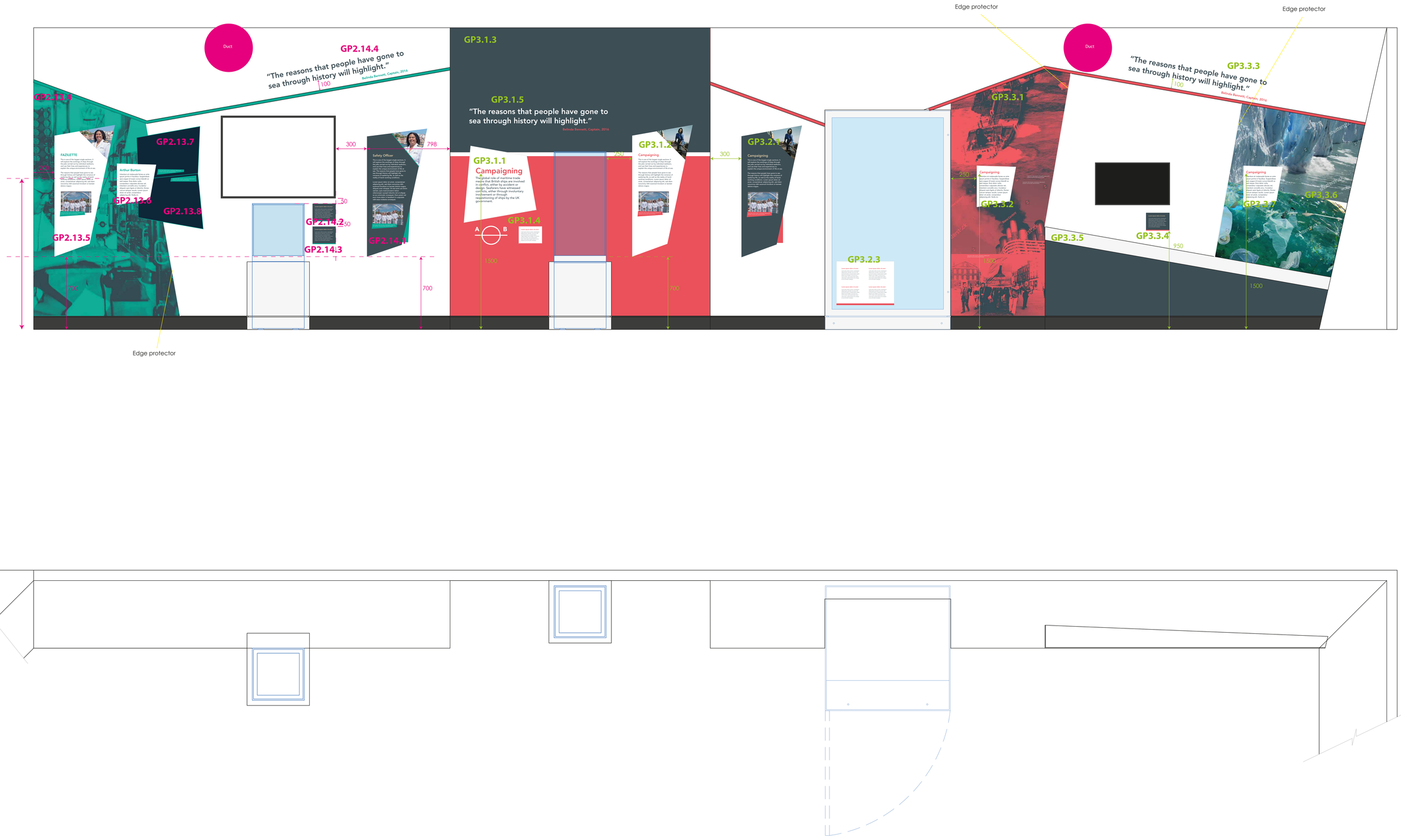
Duct
GP2.14.4
"The reasons that people have gone to sea through history will highlight."
Belinda Bennett, Captain, 2016
100
GP2.13.4
FAZILETTE
GP2.13.7
Arthur Burton
GP2.13.6
GP2.13.8
GP2.13.5
200
300
798
Safety Officer
30
GP2.14.2
50
GP2.14.3
GP2.14.1
700
GP3.1.3
GP3.1.5
"The reasons that people have gone to sea through history will highlight."
Belinda Bennett, Captain, 2016
GP3.1.1
Campaigning
GP3.1.4
A
B
1000
GP3.1.2
Campaigning
700
300
GP3.2.1
Campaigning
GP3.2.3
Edge protector
Duct
GP3.3.1
250
Campaigning
GP3.3.2
GP3.3.5
GP3.3.4
950
1500
GP3.3.3
"The reasons that people have gone to sea through history will highlight."
Belinda Bennett, Captain, 2016
100
Campaigning
GP3.3.7
GP3.3.6
Edge protector
Edge protector

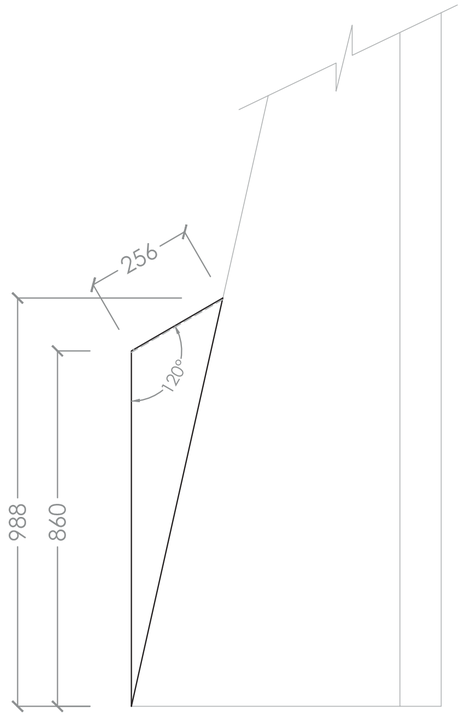

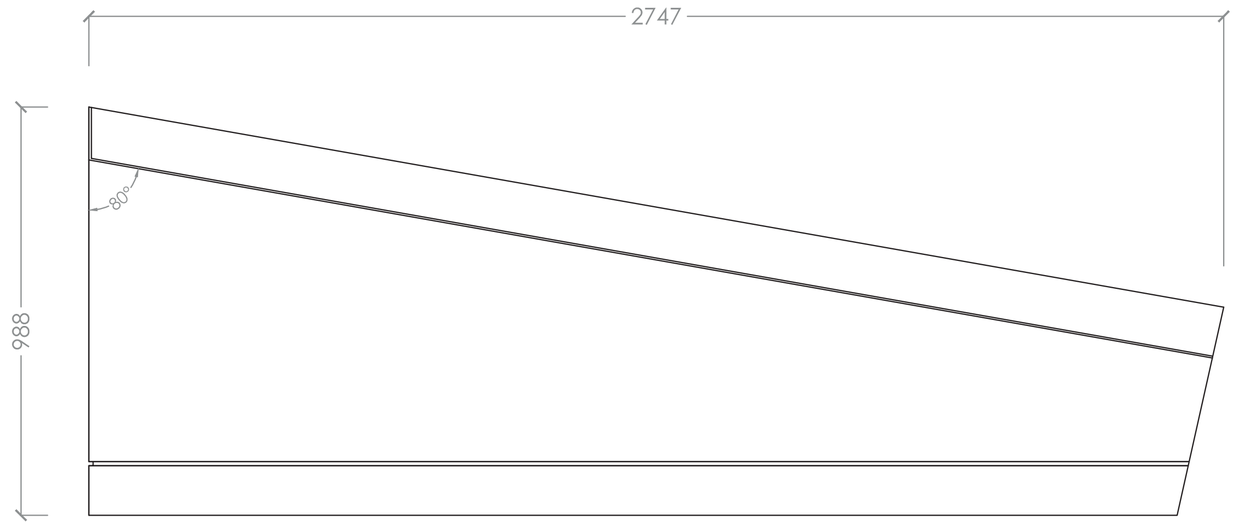

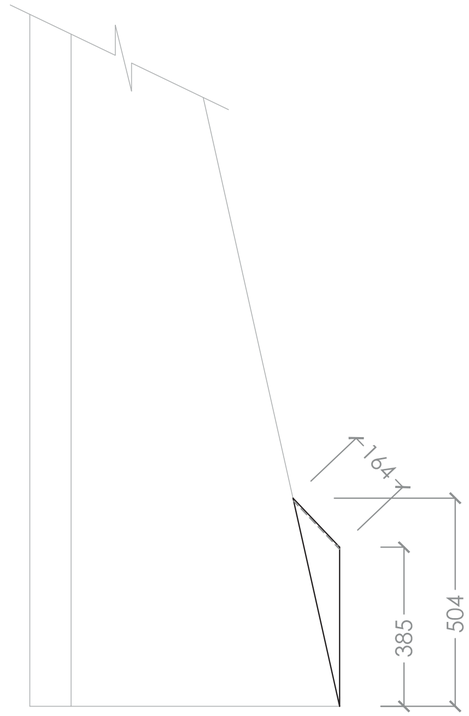

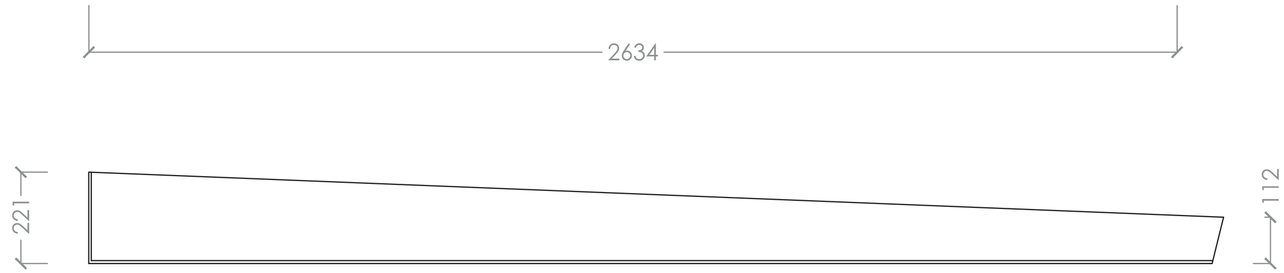

GP3.3.5

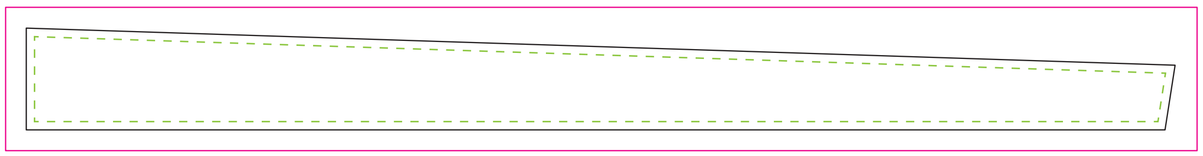

Actual face of structure

Actual Print size of graphic with 50mm bleed

Safe print area (20mm from edge)

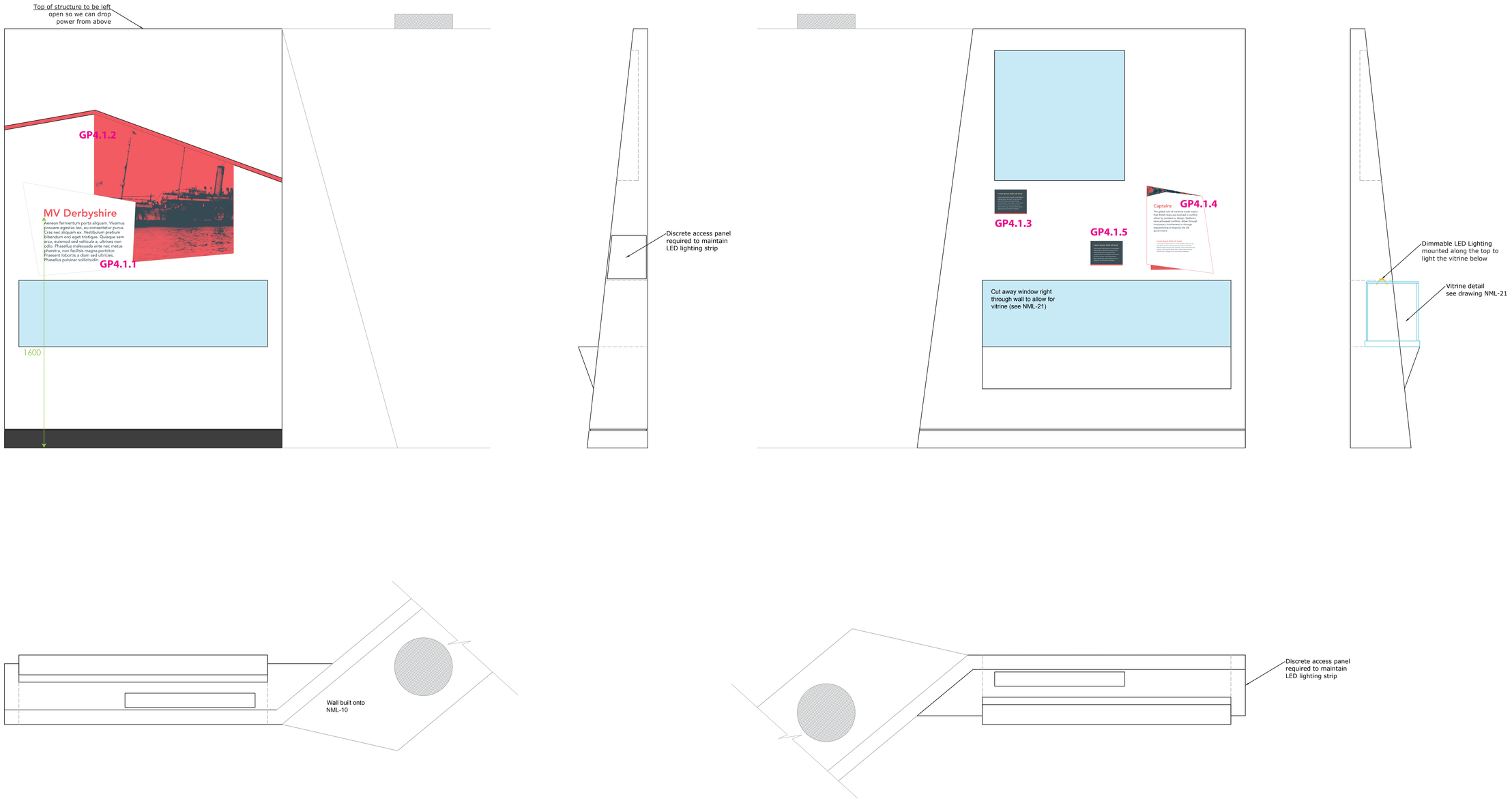
Top of structure to be left
open so we can drop
power from above
GP4.1.2
MV Derbyshire
Aenean fermentum porta aliquam. Vivamus
posuere egestas leo, eu consectetur purus.
Cras nec aliquam ex. Vestibulum pretium
bibendum orci eget tristique. Quisque sem
arcu, eulamod sed vehicula a, ultrices non
odio. Phasellus malesuada ante nec metus
pharetra, non facilisis magna porttitor.
Praesent lobortis a diam sed ultricies.
Phasellus pulvinar sollicitudin.
GP4.1.1
1600
Discrete access panel
required to maintain
LED lighting strip
GP4.1.3
GP4.1.5
Captains
GP4.1.4
Cut away window right
through wall to allow for
vitrine (see NML-21)
Dimmable LED Lighting
mounted along the top to
light the vitrine below
Vitrine detail
see drawing NML-21
Wall built onto
NML-10
Discrete access panel
required to maintain
LED lighting strip

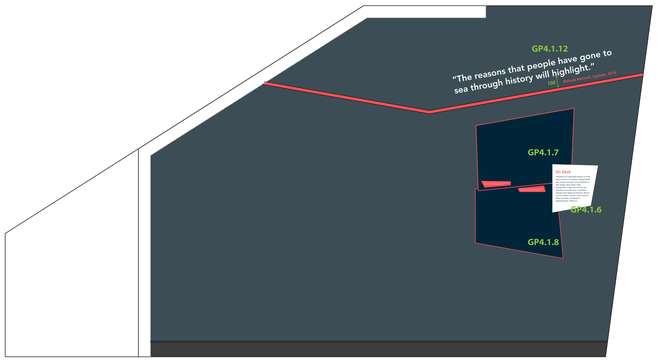

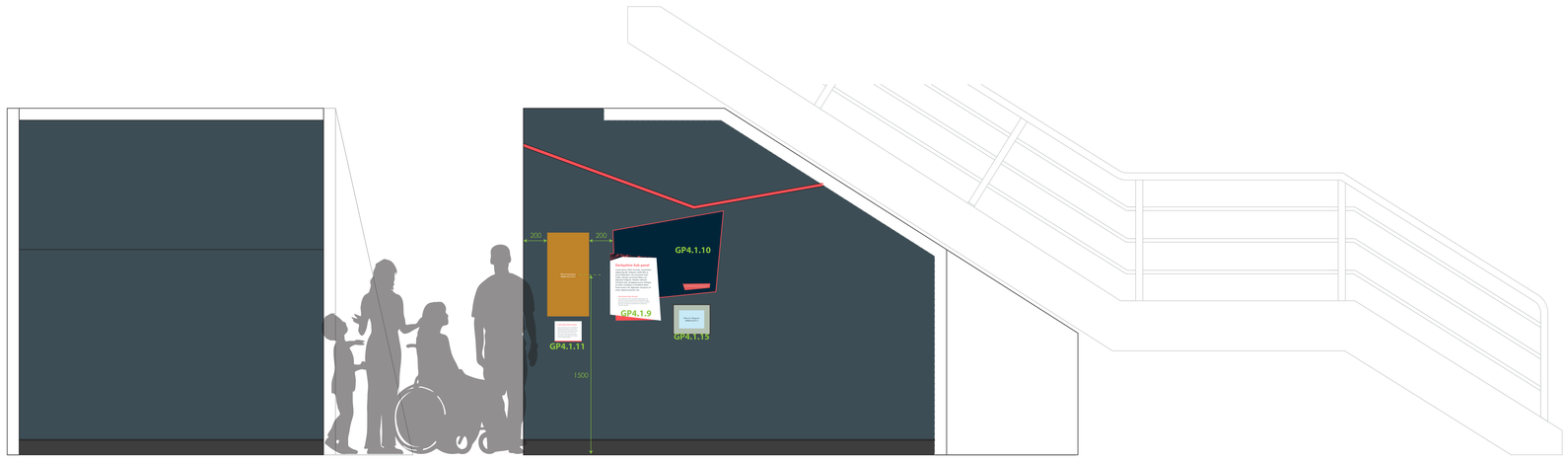

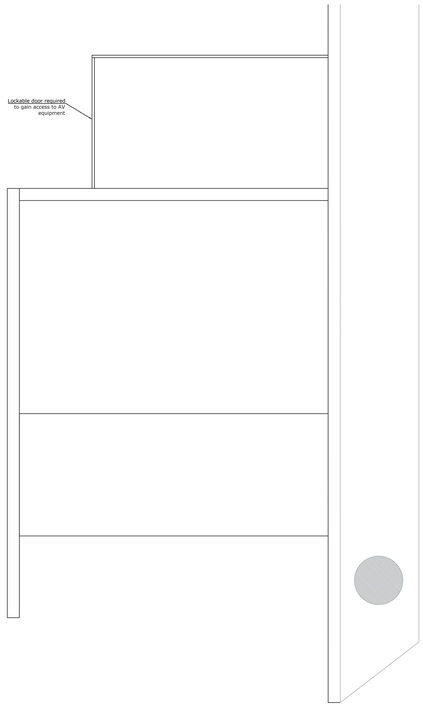

1:20
Detail of how structure works with
other walls on gallery

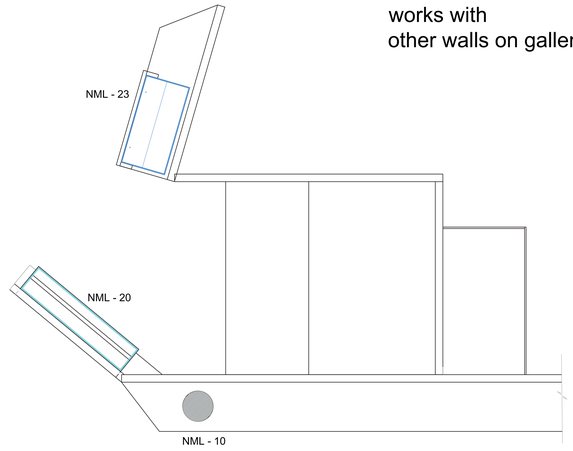

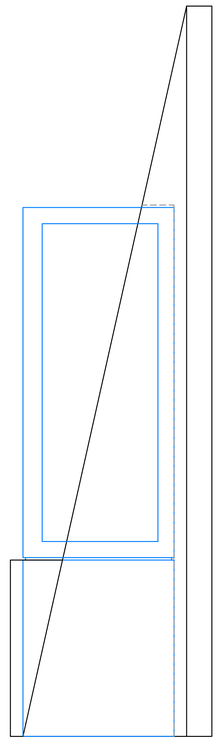

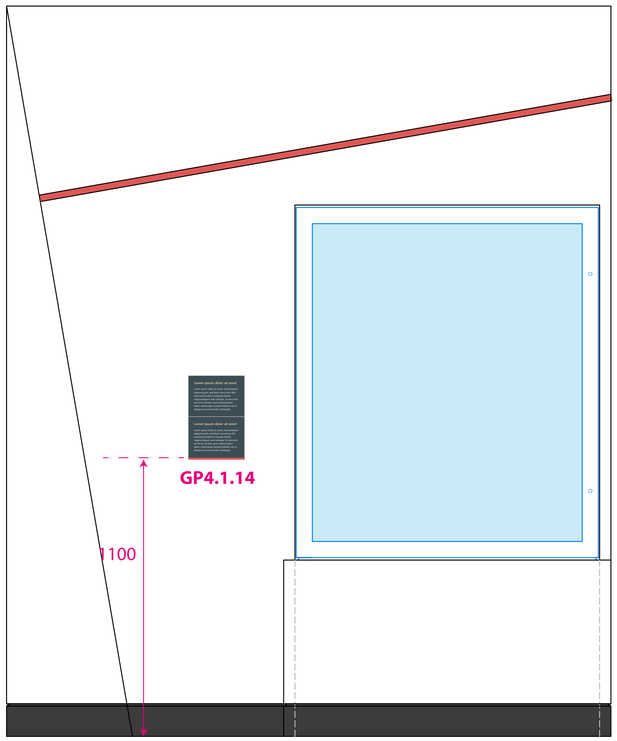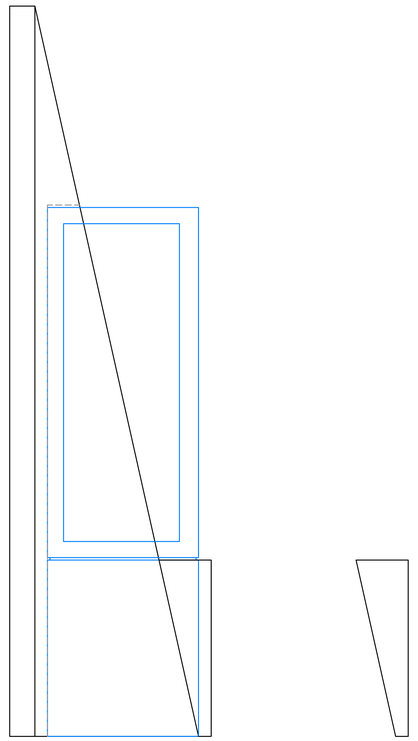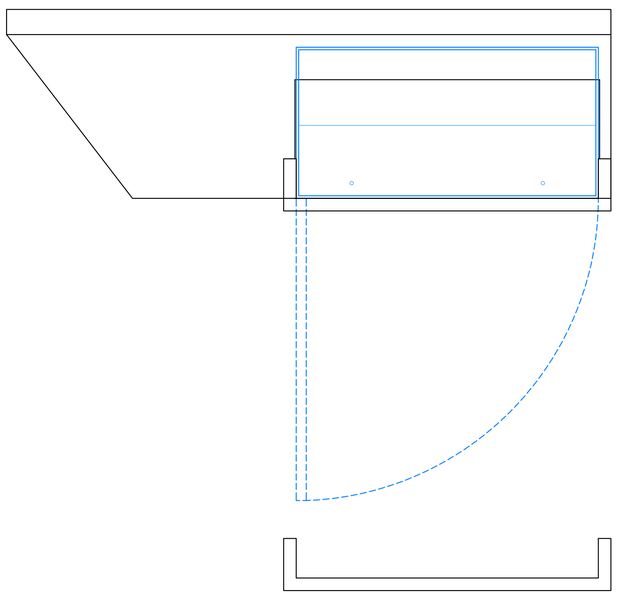
GP4.1.14
1100