Ministry of Defence

Defence Standard 05-099 Part 1

Issue 1 **Date:** **14 July 2017**

Managing Government Furnished Equipment in Industry

Part: 1 : Provides end to end view of MOD requirements for the management of GFE in Industry

---

Section 1

Foreword

Defence Standard Structure

Section 1 (Generated by the StanMIS toolset)

- Revision Note
- Historical Record
- Warning
- Standard Clauses

Section 2 (Technical information provided by Subject Matter Expert)

- Title
- Introduction (optional)
- Table of Contents
- Scope
- Technical Information to include Tables and Figures
- Annexes (as required)

Section 3 (Generated by StanMIS toolset)

- Normative References
- Definitions
- Abbreviation

REVISION NOTE

This is a new Defence Standard

HISTORICAL RECORD

This standard supersedes the following:

Def Stan 05-99 Issue 4

WARNING

The Ministry of Defence (MOD), like its contractors, is subject to both United Kingdom and European laws regarding Health and Safety at Work. Many Defence Standards set out processes and procedures that could be injurious to health if adequate precautions are not taken. Adherence to those processes and procedures in no way absolves users from complying with legal requirements relating to Health and Safety at Work.

STANDARD CLAUSES

a) This standard has been published on behalf of the Ministry of Defence (MOD) by UK Defence Standardization (DStan).

b) This standard has been reached following broad consensus amongst the authorities concerned with its use and is intended to be used whenever relevant in all future designs, contracts, orders etc. and whenever practicable by amendment to those already in existence. If any difficulty arises which prevents application of the Defence Standard, DStan shall be informed so that a remedy may be sought.

c) Please address any enquiries regarding the use of this standard in relation to an invitation to tender or to a contract in which it is incorporated, to the responsible technical or supervising authority named in the invitation to tender or contract.

d) Compliance with this Defence Standard shall not in itself relieve any person from any legal obligations imposed upon them.

e) This standard has been devised solely for the use of the MOD and its contractors in the execution of contracts for the MOD. To the extent permitted by law, the MOD hereby excludes all liability whatsoever and howsoever arising (including, but without limitation, liability resulting from negligence) for any loss or damage however caused when the standard is used for any other purpose.

Section 2

Managing Government Furnished Equipment in Industry

Part 1 : Provides end to end view of MOD requirements for the management of GFE in Industry

1 Introduction

The requirements for the management of GFE are set out in this Def Stan and in DEFCONs 23, 601, 611 and 694. The standard provides an end-to-end view of the MOD's requirements for the management of GFE in Industry. It describes the stewardship regime (physical stock management and accounting) necessary to meet Departmental Resource Accounting (JSP 472) standards for the proper control of public assets, as well as supporting improved utilization of the assets.

2 Scope

2.1 This standard specifies requirements for stewardship of and physical stock management and accounting for GFE.

2.2 This Def Stan may be called up in contracts for Collaborative Projects where MOD issues GFE items in aid of those projects e.g. Tornado, Eurofighter. When the Def Stan is called up the GFE items are subject to the same procedures as GFE items issued in aid of UK contracts, as set out in this Def Stan.

2.3 This standard is to be called up in Terms of Business Agreements (TOBA) where GFE items are issued to a MOD Department operating as a Trading Fund.

Contents

1 Introduction 2-1
2 Scope 2-1
3 Warning 2-4
4 Normative References 2-4
Glossary of Terms 2-4
5 Purpose 2-4
6 Contractors 2-4
7 MOD 2-4
7.4 Defence Internal Audit (DIA) 2-5
7.5 Defence Business Services (DBS) 2-5
7.6 DE&S SEOC 2-5
7.7 Disposal Services Authority 2-6
8 Classification 2-6
9 Records 2-6
10 Forms and Authorising Documents 2-7
11 General 2-7
11.1 The MOD's data and accounting requirements seek to ensure that: 2-7
12 Basic Principles 2-7
13 Stocktaking 2-8
14 Data & Record Management 2-9
15 Periodicity 2-9
16 Responsibilities 2-9
17 Categories of GFE 2-9
17.1 Issued Property. 2-9
17.2 Contract Work Item (CWI). 2-10
17.3 Contract Support Item (CSI). 2-10
17.4 Contract Embodiment Item (CEI). 2-10
17.5 Contract Work Arising (CWA). 2-10
Annex A Glossary of Terms 2-11
Annex B Materiel Accounting Guidance for Contractors 2-12
Appendix B1 – MOD Form 650 Process 2-18
Annex C Role of the DIA - Audit of Public Store Account 2-20
Annex D Loan Categories Mapped Against Previous Loan Arrangements 2-22
Annex E Forms and Authorising Documents 2-23
APPENDIX E1 - DEFFORM 44A 2-25
APPENDIX E2- MoD form 445 (Reverse) 2-28
APPENDIX E3 - MoD form 458 2-29
APPENDIX E4 - MOD Form 640 (Payment & VAT Invoice Copy Only - Reverse) 2-31

APPENDIX E6 - Mod form 650A **2-33**
APPENDIX E7 - GFE Form 651 ..... **2-34**
APPENDIX E8 - form 749 ..... **2-35**
APPENDIX E8 - form 749 (Reverse) **2-36**
APPENDIX E9 - form 750 ..... **2-37**
APPENDIX E10 – AAC 32 ..... **2-38**
APPENDIX E11 THE ELECTRONIC BUSINESS DELIVERY FORM **2-41**

Managing Government Furnished Equipment in Industry Part 1; Provides the end to end view of MOD requirements for the management of GFE in Industry

3 Warning

Refer to Section 1 of this document for the safety warning.

4 Normative References

Refer to Section 3 of this document for the normative references.

Glossary of Terms

For the purposes of this Defence Standard, the Glossary of Terms, including definitions and abbreviations used, are set out in **Annex A**. In addition, certain categories of GFE are described in **Clause 17**.

5 Purpose

This Standard sets out the policy and process framework relevant for the stewardship of GFE by Industry.

6 Contractors

6.1 GFE is to be controlled through the use of a Public Store Account (PSA). All receipt and issue entries must be referenced to a specific authorised document, which is to be made available for audit inspection. Contractors are to apply to Defence Business Services (DBS), see **Clause 7.5**, for an account/AIMS No. for each site operated where GFE will be held. If running multiple PSAs is impracticable for a Contractor and where agreement is reached with DBS to operate multiple sites against a single PSA, the Contractor is to include the location of the individual assets in their DEFCON 694 return. GFE shall only be held/used in support of the contract or other authorising document for which they are supplied, unless prior documented MOD authority is given for other uses. Transfers of GFE from one contract to another are to be authorised and recorded.

6.2 If GFE is issued to a subcontractor, by or on behalf of the main contractor, the main contractor remains responsible for ensuring that they are used only for the purpose for which they were authorised under the main contract or other authorising document.

6.3 Any disposal action, including scrap materiel, by the contractor shall be authorised by MOD and recorded in the PSA.

7 MOD

7.1 The MOD is responsible for issuing GFE, accompanied by appropriate documentation, in accordance with the contract or other authorising document. The MOD is also responsible for issuing disposal instructions in a timely manner. Documentation in respect of GFE issued by MOD to contractors shall identify the contract, or other specific authorising document, to which the entitlement relates and the applicable loan category.

7.2 MOD materiel accounting policy is directed and sponsored by Support Chain Process, MOD Abbey Wood, Bristol BS34 8JH.

7.3 If requested, the MOD Project Team, within a reasonable time, and where practicable before delivery of the GFE, will notify the contractor of the value of the GFE or, where not available or if commercially sensitive, an indicative value. He shall also promptly resolve discrepancy reports and shall provide disposal instructions expeditiously upon the contractor's request.

7.4 Defence Internal Audit (DIA).

7.4.1 DIA5a is responsible for the audit of the population of Contractors holding GFE. This includes conducting an objective and independent appraisal of MOD and its Contractors system of risk management, governance and internal control, reporting to PUS and Defence Audit Committee (DAC) in relation to GFE held at industry in accordance to Defence Conditions and Standards. This will provide an assurance opinion that GFE supplied to contractors are properly managed and physically accounted for, including cryptographic equipment on behalf of the Defence Crypto security Authority (DCA). Additionally, DIA5a is responsible for facilitating the opening and closing of accounts in conjunction with MOD Project Teams and Defence Business Services.

DIA-IA5a[1]
Level 4 Piccadilly Gate
Store Street
Manchester
M1 2WD

Tel: 44 (0) 161 233 5377

7.5 Defence Business Services (DBS)

7.5.1 The DBS is responsible for the delivery of corporate services in the MOD. In respect of GFE, the DBS are responsible for ensuring the Assets in Industry database is complete and accurate in respect of Contractors accounts. Additionally, DBS will collate the data received from Industry concerning PSA holdings. Defence contractors shall forward their quarterly reports on their current PSA holdings to the DBS.

DBS Finance FAADMT – Assets in Industry 1
Level 4 Piccadilly Gate
Store Street
Manchester
M1 2WD

Tel: 44 (0) 161 233 5397

7.6 DE&S SEOC

7.6.1 The formulation of Materiel Accounting policy for GFE is vested in the Support Chain Process, Supply Section Leader (DES SEOC SCP-Sup-DptyTL). All requests for advice from Defence Contractors regarding the management of GFE or enquiries relating to this Standard should be addressed to:

DES SEOC SCP-Sup-MatAcctng 1
Cedar 1b #3146,
MOD Abbey Wood,
Bristol,
BS34 8JH

Tel : 44 (0) 30679 81443

Where full compliance with this document is not possible or practicable, then unless otherwise stated, a request for dispensation shall be submitted to DES SEOC SCP-Sup-MatAcctng 1
.

[1] Reference to DIA-IA5a throughout this standard will mean the appropriate DIA-IA5a Account Manager

7.7 Disposal Services Authority.

7.7.1 Within the MOD, the Disposal Services Authority (DSA) is responsible for the disposal and sale of surplus, redundant or obsolete material and equipment, through a series of commercial marketing agreements with industry.

8 Classification

8.1 All GFE issued to a contractor are on loan under the terms set out in the relevant contract or other authorising document. Loan categories have been redesignated, the table at **Annex D** maps the previous wide range of schemes into the loan category structure.

8.2 Secondary classifications may be necessary to provide a complete picture of an item's status, identifying, for example, whether a charge is made for the loan of a Contract Support Item.

9 Records

The following records are to be maintained, where appropriate:

Public Store Account (PSA). The primary record for accounting for receipts, usage and disposal or return of GFE of all loan types held under contract. The PSA may be a manual stock-record-card system or a computer system consistent with the contractor's normal accounting system. The form of the PSA and any subsequent changes are to be agreed with DIA-IA5a.

Quarantine Record. A record of GFE received that cannot be identified to a current contract, or other authorizing document, pending transfer to the authorised contract.

Issues to Inspection Record (or Reject Record). A record of all Contract Embodiment (CE) items issued from store for inspection or test purposes, maintained as a basis for ensuring that items are returned or cleared in a reasonable time period.

Issues to Working Parties Record. A record of items issued to a working party, maintained as a basis for ensuring that items are returned in a reasonable time period and that the PSA is adjusted to reflect consumption of items by the working party.

Forward Holdings Record. A record to be maintained in the forward area to control holdings of items on the shop floor, or in other areas forward of the main store e.g. non self-accounting subcontractors.

Borrowings & Loans Register. A record maintained to manage the authorised loan, by MOD to the contractor, of any items of GFE for use on commercial contracts. Issues from the PSA for commercial use must be recorded within the Borrowings & Loans Register and progressed through to full repayment/replacement. The medium for authorising the commercial use of GFE will be by contract amendment but may initially be covered by other MOD authorising documentation.

Register of Fault Investigation Records. A record maintained to allow the contractor to progress individual Fault Investigations.

F650 Register. A register of all MOD Forms 650, maintained to monitor return of receipts for all items of GFE dispatched by the contractor.

Discrepancy Report Register. A record maintained to monitor satisfactory resolution of all Discrepancy Reports (MOD Form 445) raised by the contractor.

F650A Register. A register of all MOD Forms 650A maintained to monitor scrap or lost GFE.

F749 Register. A register of all PE(SA) Forms 749, maintained to record unresolved deviations.

10 Forms and Authorising Documents

MOD and contractor forms may all be used as authorising documents to support transaction records in the PSA. The Forms and Authorising Documents used to control GFE are defined at **Annex E**. The receipt and issue of GFE to and from store shall be authorised and shall be cross-referenced to an official source document. The main forms of source document are:

a) MOD Contract. Used as the authority for GFE consumption or use on new build/production, supported by reference to a build record or drawing or service activities.

b) Survey Report. Used to record work to be carried out on an item sent in for repair/overhaul. Identifies any embodiment items required in aid of the repair and states the reason for call up. The Survey Report shall be authorised by an appropriate officer of the contractor and counter-signed by MOD if required in the contract. The Survey Report is an accountable document and shall be made available for audit inspection. Supplementary Survey Reports may be used to identify additional or replacement requirements for embodiment items or equipment's. Survey Reports are also used to identify serviceable or repairable components or sub-assemblies removed from an item undergoing repair – Contract Work Arisings (CWAs).

c) Other Authorisations:

(i) May take a variety of forms, such as a letter from the MOD Commercial Officer, confirming consent for transactions such as scrapping on site, extension of loan periods, and issue of items covered by an amendment to the contract.

(ii) PTs and other MOD representatives may cause a letter or contract amendment to be raised requiring the countersignature of the MOD's Quality Assurance Representative on various forms.

11 General

11.1 The MOD's data and accounting requirements seek to ensure that:

a) The owners of the assets are aware of the range, volume and value of their assets in industry, to help ensure maximum utilization and minimum cost.

b) A full audit trail exists from receipt by the contractor to return or disposal by the contractor.

11.2 The PSA is the primary physical accounting record for GFE, supported by MOD and contractor forms, and supplementary registers as appropriate. A list of the forms, records and authorising documents is at **Annex E**.

11.3 For Special Jigs, Tooling & Test Equipment (JTTE) held under DEFCON 23, a tooling register is the primary record through which the full audit trail set out above is maintained. Once JTTE has been accepted by the Authority, then the JTTE shall be held under DEFCON 611 as Issued Property and the PSA shall be the primary accounting record. **Clause 12** focuses on DEFCON 611 items.

12 Basic Principles

12.1 All GFE transactions shall be recorded in the PSA. The PSA stock recording system is required to ensure that all transactions are visible, with balances altered using separate accounting entries i.e. an incorrect transaction quantity should be changed by extra transactions not by adjusting the quantity in a supporting table. Any change to the processing methodology of the computer system that affects data fields for the PSA is to be recorded with an explanation of the change and notified to DIA-IA5a. Where there is a requirement for manual stock records to be maintained then all entries are to be made in ink and any alterations are to be in such a way that the original entry is legible.

12.2 All receipt and issue entries, shall as a minimum; be referenced to a contract number (or other specific authorising document) and NSN or unique part number (see DEFCON 694). If not referenced correctly, GFE shall be quarantined. Records shall be retained in accordance with **Clause 14** below and made available for audit inspection when required within the periods specified in that paragraph.

12.3 The information listed in the Item Record Information table in DEFCON 694 is to be recorded for each type of equipment in the PSA and retained in accordance with **Clause 14** below.

12.4 All Contract Support Items (CSIs) are to be monitored for loan expiry dates and where an extension is required this is to be authorised prior to the expiry date. As soon as the GFE, inclusive of all loan categories, is no longer required by the contractor or on contract completion (after any warranty liability has expired), the contractor is to seek instructions for property held against the contract, in accordance with DEFCON 601 or DEFCON 611. Where GFE is held under another authorising document the contractor is to seek disposal instructions from the Project Team when the holding authorization expires or the holding is no longer required under that document.

12.5 In the event of termination of a contract, the Contractor is to detail all items of purchase or manufacture rendered surplus to the requirements of the contract using DEFORM 44A and submit the schedule to the appropriate Contracts Branch as detailed in the contract.

12.6 GFE may only be scrapped with both the prior authority of MOD and by use of a MOD Form 650A. The MOD Form 650A is to make reference to the authorising document.

12.7 Where a contract does not exist to cover the retention of GFE, for instance where residual work may be required, the contractor is required to obtain authorisation for retention which will state the terms for that retention. Until authorisation for retention is obtained the GFE is to be held in store and recorded in the Quarantine Record.

12.8 GFE losses shall be identified and submitted to the Authority, through DBS, by inclusion on MOD Form F749 or 650A as appropriate. Submission of the MOD Form 749 or 650A shall be taken as the authority to adjust the PSA. No loss recovery action will be initiated until agreement is reached between the contractor and the Project Team.

13 Stocktaking

13.1 The contractor is required to carry out a 100% physical# stocktake annually. Where full compliance with the stocktaking policy is not possible or not practicable a request for dispensation or exemption may be submitted through DES SEOC Sup-MatAcctng2, for consideration, which shall not be unreasonably refused.

13.2 Stocktaking should be undertaken by personnel independent of the storekeeping and stock accounting functions. Where this is not practicable, the minimum requirement is that the physical check and the reconciliation processes are to be undertaken by separate individuals.

13.3 Stocktaking plans and processes should be submitted to DBS and DIA-IA5a respectively for approval. Additional guidance is at **Annex B**.

13.4 The contractor shall provide an Annual Certificate for the Accounting Control of GFE (AAC 32). A responsible person in the contractors' organisation shall sign the Certificate. The responsible person shall be a member of the contractors' local site management committee or shall report directly to an individual on that committee.

13.5 The AAC 32 Stocktaking Results shall use the loan categories set out in **Annex D**, notwithstanding that the PSA records may still reflect the old categories. Where the use of the loan categories is impracticable the contractor shall consult DBS.

13.6 Pre-packaged equipment shall not be opened unless the packaging is damaged, so that it no longer affords protection, or the equipment is likely to have been damaged, or if there is a reason to suspect tampering. If not damaged, or suspect, the quantities marked on the packaging shall be taken as correct.

14 Data & Record Management

GFE documentation and records shall be retained for a period of six years from the date of the PSA entry, unless otherwise specified by the contract or DEFCON 609 or other authorising document. Scanned copies of original records may be used as working documents so long as the original documents are retained. The contractor shall obtain DIA-IA5a's prior approval before any documentation raised or received in support of the PSA is destroyed earlier than the stated times.

15 Periodicity

15.1 To facilitate delivery of improved value for money through enhanced efficiency and effectiveness, by providing managers with a clear view of the assets they deploy as part of acquisition and support programmes, the contractor is to provide unreconciled advisory reports and reconciled reports to MOD in accordance with DEFCON 694, or as otherwise specified in the contract.

15.2 The MOD will seek to ensure that audits and reporting requirements are not duplicated. The contractor should inform DBS in the first instance if duplication arises between DEFCON 694 requirements and any PT requests.

15.3 The scope and requirements for audits are set out in **Annex C**.

16 Responsibilities

16.1 Before issuing GFE to a subcontractor, the contractor is to notify DIA-IA5a and obtain confirmation from DIA-IA5a whether or not the subcontractor can account for the GFE in a PSA. DIA-IA5a should seek approval from the contract owning PT prior to granting self-accounting status to a subcontractor. Where a company becomes a subcontractor to an MOD contractor and DIA-IA5a has confirmed that the subcontractor may account for GFE issued by the contractor in a PSA then that company may be described as a self-accounting subcontractor. Note; approval for self-accounting status is given on a contract-by-contract basis.

16.2 A contractor placing work involving GFE with a self-accounting subcontractor must place an obligation on that subcontractor to handle and account for the GFE issued under the subcontract in accordance with this Def Stan as if it were the "contractor". The subcontractor shall account to the DIA for the GFE issued under the subcontract. Notwithstanding these arrangements, the main contractor remains responsible to MOD for the disposition of GFE under the contract.

16.3 Following any audit by the DIA of a self-accounting subcontractor, the DIA will, when auditing the PSA of the contractor, confirm the satisfactory audit of all self-accounting subcontractors or, if not having done so earlier, advise the contractor of any concerns that may affect the handling or accounting of GFE issued to a subcontractor.

16.4 Subcontractors that are not self-accounting are to be managed by the contractor as if they are a Forward Holding (see **Clause 9e**). The contractor is responsible to MOD for the disposition of GFE held by a subcontractor. See **Annex B, B.4.3** to **B.4.5.**

17 Categories of GFE

17.1 Issued Property.

17.1.1 Issued property means items of materiel provided by MOD to a contractor, under DEFCON 611, for a particular purpose and specified period under a specific GFE scheme, with or without charge, which, unless embodied in another asset, are normally subject to physical return to MOD in the same condition as issued, fair wear and tear excepted. The items can be fixed, capital spare or consumable in nature and can either be embodied in other assets or remain in a singular state throughout the period of the contract. Issued Property also includes JTTE purchased under DEFCON 23 when transferred from DEFCON 23 to DEFCON 611 on acceptance and shall be treated as CSI.

17.1.2 There are various types of GFE category for Issued Property in existence. GFE category definitions are shown cross-referenced within the table summarising the alignment of old categories to the primary classifications at **Annex D**. It is emphasised that retrospective action to change loan records is not required in the PSA, but will be required for annual stocktaking certification (see **Clause 13.1)**.

17.2 Contract Work Item (CWI).

This describes an item of materiel being worked on in accordance with a MOD contract. It is an item of materiel temporarily issued to a contractor, without charge and for a specified period, typically for the purpose of undergoing repair, refurbishment, maintenance, servicing, modification, enhancement or conversion, or for the purposes of undergoing inspection or packing, and which is subject to physical return in a specified condition. CWI was formerly referred to as a contract loan item.

17.3 Contract Support Item (CSI).

This describes an item of materiel, capital spare, provided to support work on a CWI in accordance with a MOD contract. It is an item of materiel provided to a contractor for a particular purpose and specified period, with or without charge, which is subject to return in the same condition as issued, fair wear and tear excepted, or is replaced with an identical item as new. CSI was formerly referred to as an ordinary loan.

Note. Where the Contractor is holding a Reference Set to meet the requirements of providing Continuous Design Services or Post Design Services, then the Reference Set is to be recorded under loan category CSI on the PSA. In the event that a component of the Reference Set becomes defective and a replacement component is supplied by MOD for embodiment then on receipt the item should be recorded as CEI with the Loan Category being updated to CSI upon embodiment within the Reference Set; the defective component is to be treated initially as a CWA. Recording the individual component as a CSI upon embodiment is only required where the contractor is recording the individual components of the Reference Set on the PSA."

17.4 Contract Embodiment Item (CEI).

This describes an item of materiel embodied in a CWI in accordance with a MOD contract. It is an item of materiel provided to a contractor, without charge, for incorporation into an asset under manufacture, production, construction, repair, refurbishment, maintenance, servicing, modification, enhancement or conversion. CEI was formerly referred to as an embodiment loan item (or issue) and can include items issued from Contract Repair Support Stock (CRSS), Contract Repair Support Procedures (CRSP), Contractors Bonded Stores Scheme (CBSS), and Ministry Supplied Materiel (MSM) schemes, a common feature of which is the contractors' direct custodial responsibility of the items prior to issue. Items may be issued as new acquisitions or from existing inventory holdings.

17.5 Contract Work Arising (CWA).

This describes an item of materiel removed from a CWI in accordance with a MOD contract. It is an item of materiel, which is removed (often as a result of cannibalisation or salvage action) from an existing item of materiel (which may then be identified for disposal) for incorporation into another item of materiel, or for retention as a fixed asset or stock item. CWA was formerly referred to as a contract loan arising. Once removed, if the item is not to be disposed of, it is either brought on charge as a CWI pending work completion, issued as a CEI for embodiment, or a CSI. CWAs include items removed from items of materiel by a primary repair contractor for onward transfer to subcontractors.

Annex A
Glossary of Terms

Note: Definitions for forms are available in **Annex E** to this document and terms to describe records and authorising documents are in **Clause 9.** Additional definitions are specified in DEFCON 501.

Term **(Abbreviation in brackets)**	**Description**
Collaborative Project	A major defence equipment project that is funded and managed by the Governments of two or more countries.
Disposal Services Authority	Defence Agency responsible for the disposal and sale of Defence equipment.
Government Furnished Equipment (GFE)	All Government equipment issued to the contractor either under a contract or an authorising document, or both. For the avoidance of doubt, the term GFE applies to all MOD owned equipment, including vehicles and other platforms, held under the custodianship of Industry, MOD Departments operating as a Trading Fund, other Government Departments, or other Governments. This also includes MOD owned assets held under Contractor Logistic Support (CLS) arrangements.
Project Team (PT)	A MOD body responsible for managing a project or series of projects and under whose purview a contract is let and administered. Contact details of the PT are contained in Box 2 of DEFFORM 111.
Inventory	A generic term used to describe a record of holdings of spares and equipment
Special Jigs Tools and Test Equipment (JTTE)	Special to Type jigs, tools, patterns, moulds, dies, manufacturing gauges and test equipment, together with any associated fixtures, fittings and software necessary for the manufacture of the Articles or for the performance of any other work in accordance with the Contract Schedule of Requirements.
Subcontractor	A supplier who receives a subcontract from the contractor for work in the performance of an MOD contract.
Surpluses	Items held against an inventory which exceed the amount(s) needed for the contract(s) for which they are supplied, or which are not required for any current contract.
Tested to destruction	The testing of a piece of equipment to a point where it is beyond repair or recovery.

Annex B Materiel Accounting Guidance for Contractors

B.1 Receipts

B.1.1 General

B.1.1.1 The contractor should have suitable processes and organisation in place to ensure that the PSA is managed in accordance with this Def Stan.

B.1.1.2 Receipts of GFE can arise from deliveries to a contractor site, and from within the site as a result of contracted work. All receipts of GFE, from whatever source, should be recorded in the PSA, preferably within 14 working days or as soon as possible after receipt. The contractor's internal procedures should ensure that all GFE receipts are identified to enable the transaction to be recorded in the PSA, with the details required under Annex A to DEFCON 694. Under no circumstances should the GFE be utilised prior to being recorded in the PSA.

B.1.1.3 All receipts should be identified and recorded against a current relevant authorisation document. If GFE is received that cannot be identified to a current authorisation document, details should be entered in a "Quarantine" record, pending transfer to the authorised contract record, and a Discrepancy Report MOD Form 445 raised. If no authority is provided by MOD to hold the equipment, it should be returned in accordance with MOD instructions. Clearance details should be entered in the Quarantine record.

B.1.1.4 If the GFE is not received with full documentation, details should be entered in a Quarantine record, and a Discrepancy Report MOD Form 445 raised. When full documentation is received from MOD, the GFE should be transferred to the authorised contract record and clearance details entered in the Quarantine record.

B.1.1.5 Copies of documentation related to the issue of the GFE, e.g. delivery or advice note, should be retained in support of the PSA. A receipted copy should be sent to the consignor without delay.

B.1.2 Issue Transaction Summaries (ITS) – MOD Form 458

B.1.2.1 An ITS is a consolidated list of items despatched from a MOD Supply Depot to a contractor in a specified period. ITSs are sequentially numbered by Depot and by Unit Identification Number (UIN). There is no requirement to provide MOD with individual receipted vouchers for items covered by an ITS, with the exception of items categorised as, ACTO, attractive, security classified or items nominated by the Project Manager, where the provider shall request a receipt.

B.1.2.2 Each ITS should be checked to confirm that all transactions have been received. If there are any discrepancies, or items listed that have not been received within 28 days of the ITS date, Discrepancy Reporting action should be initiated using the document at Appendix E2, MOD Form 445. Where the ITS indicates issue of Cryptographic Equipment, before initiating any Discrepancy Reporting action the Defence Crypto security Authority (DCA) should be contacted through the PT in order to confirm dispatch details. Additionally, any breaks in ITS serial numbers should be reported to the relevant supply depot.

B.1.2.3 In the event of materiel being received which was not required under the contract, the items are to be returned to the consignor using the Discrepancy Reporting process.

B.1.3 Fault Investigation Items

B.1.3.1 All items received for Fault Investigation shall be recorded in the PSA as a CWI. The PSA record should clearly identify that the items have been received for Fault Investigation purposes.

B.1.3.2 A Fault Investigation Report (e.g. MOD Form 761 or NAVY Form 2022) should be raised to cover the investigation findings. The report would normally be counter-signed by a MOD representative (e.g. either, or acting on behalf of, the responsible technical or supervising authority named in the contract) to concur with the report findings. A statement of liability should be made on the Investigation Report to indicate whether the liability is in question.

B.1.4 Rejected Items

B.1.4.1 Items found to be defective after issue from the Contractors' GFE store should be returned to store under cover of a reject note. Full details of the reason for rejection/failure, as well as a liability statement, should be recorded on the document. Rejected items should be recorded in the PSA and the record should clearly indicate that the items have been rejected. Rejected items should be stored separately from serviceable items where practicable and disposal instructions should be sought promptly, using PE(SA) Form 651.

B.1.4.2 The reject note, PE (SA) Form 651 may serve as the authorising source document if replacement CEIs are required.

B.1.5 Contract Work Arisings (CWAs)

CWAs should be identified on Survey Reports and the items should be promptly returned to store under cover of a stores return note, and accounted for in the PSA. The Contractor should seek instruction from the PT as to the terms and authorisation that the CWAs should be held under or whether the CWAs should be returned to MOD. If the CWAs are found to be unserviceable guidance should be sought from the PT as to whether they should be put into the relevant repair loop or disposed of in accordance with MOD disposal instructions.

B.1.6 Special to Contents (STC) Cases and Containers

All STC cases and containers must be recorded in the PSA as CSI. The cases and containers should be stored in a secure area pending their re-use or return to MOD.

B.1.7 Bonded Stores

There are occasions when the MOD requires a contractor to retain equipment at contractor premises under a "Bonded Store" scheme, pending delivery to MOD at a later date. These items could be CWIs following repair, or items developed under research and development contracts. Whilst held in the Bonded Store the items are to be treated as GFE and recorded in the PSA as CSIs.

B.1.8 Discrepancy Resolution

B.1.8.1 Discrepancy Reports, MOD Form 445 or equivalent, are to be raised for receipt discrepancies from a MOD Supply Depot. They should be uniquely identified, e.g. sequentially serial numbered, and cross-referred to the consignor's issue voucher (IV). One copy should be retained and two other copies should be sent to the consignor, who should return one copy annotated with the appropriate response. A copy should be sent to the Commercial Officer responsible for the contract. The Discrepancy Report serial number should be entered on the IV and a register of all Discrepancy Reports raised should be maintained.

B.1.8.2 If the discrepancy is believed to be of a high value or contentious nature, the MOD Representative (e.g. either, or acting on behalf of, the responsible technical or supervising authority named in the contract) should be invited to view the consignment and add any observations to the Discrepancy Report.

B.2 Stocktaking Guidance

B.2.1 The Stocktaking Record Sheet – PE (SA) Form 750

B.2.1.1 In order to comply with **Clause 13**, the contractor may use PE (SA) Form 750 and PE (SA) Form 749 or contractor forms serving an equivalent purpose with the agreement of the DBS.

B.2.1.2 The stocktaking count list is not to contain quantity of stock expected (blind list) and should be compared to the PSA recorded quantity following completion of the check to identify any discrepancies.

B.2.1.3 Stocktaking programmes should be planned to allow sufficient time for completion and investigation of any discrepancies for the annual certification.

B.2.2 Stocktaking Dispensations

Requests for a stocktaking dispensation can be sought through DES SEOC Sup-MatAcctng2 by making a request in writing.

B.2.3 Stocktaking Discrepancy

B.2.3.1 A stocktaking discrepancy is a difference between the physical stock count or other agreed measure, e.g. by weighing and the Public Store Account record, including materiel condition. All discrepancies are to be investigated,

B.2.3.2 Any stocktaking discrepancy found, during investigation, to be attributable to theft, fraud, criminal activity or culpable negligence is to be reported to the Project Team without delay.

B.2.3.3 Discrepancies on materiel categorised by the provider as ACTO, attractive, security classified that are not attributable to accounting errors are to be reported immediately to the Project Team.

B.2.3.4 The detail and outcome of investigations of stocktaking discrepancies are to be recorded to demonstrate that the appropriate checks have been carried out and for DIA audit purposes.

B.2.3.5 On completion of investigation, for confirmed discrepancies the PE (SA) Forms 749 are to be raised and submitted with the AAC 32 Certificate to the DBS. The PSA should be adjusted for the discrepancies on submission of the PE (SA) Form 749.

B.2.3.6 Where the discrepancy is reconciled following submission of the PE(SA) Forms 749 but prior to the next AAC 32 submission the DBS should be notified as soon as possible in order that the loss recovery action can be rescinded.

B.2.4 Sample Documentation

Sample copies of AAC 32, PE (SA) Form 750 and PE (SA) Form 749 are at **Annex E**.

B.3 Inventory Maintenance

B.3.1 Shelf Life Items

Certain items may have a specified shelf life. It is important that these items are properly controlled to ensure that turnover and issues are correctly managed. Where relevant, stock records should indicate the shelf life date and procedures should ensure that items approaching shelf life expiry are brought to the attention of MOD and/or actioned in accordance with the relevant instructions.

B.3.2 Forward Holdings

B.3.2.1 Forward holdings, including those at non self-accounting subcontractors, should be accounted for at all times. The stock balance in the PSA should only be reduced on final clearance or disposal of the items. Items issued to a contractor for use on Deployed Operations (CONDO) are also to be managed as forward holdings.

B.3.2.2 Further movements of items, after issue as a forward holding should be recorded so that the PSA is updated. Where practical, items not in use should be returned to the main store for safekeeping.

B.4 Sub Contractors

The main contractor should ensure that the subcontractor has satisfactory procedures and controls in place to properly safeguard GFE.

B.4.1 Self-Accounting Subcontractors

B.4.1.1 Self-accounting subcontractors are responsible for maintaining the records in accordance with this Def Stan, including the provision of an annual stocktake, and the provision of stock holding information to the contractor.

B.4.1.2 Self-Accounting arrangements are to be authorised by DIA-IA5, see Clause 16.1.

B.4.1.3 Self-Accounting arrangements are to be restricted to specific contracts.

B.4.1.4 GFE held by Self-Accounting Subcontractors will be subject to audit by DIA. Claims arising out of losses, etc. will be made in the first instance against the subcontractor, however, final liability rests with the main contractor.

B.4.2 Non Self-Accounting Subcontractors

B.4.2.1 Non Self-Accounting Subcontractor status has the following characteristics:

a) Non-self accounting subcontractor is one to whom issues of GFE are made by the main contractor, but the subcontractor does not record the items in a PSA. All items remain on charge in the PSA maintained by the main contractor.

b) Movements should not be covered by MOD Form 650. Commercial paperwork should be used to cover issues between the main contractor and subcontractor. The main Contractors' Forward Holdings Record should clearly indicate which items are held by non-self accounting subcontractors.

B.4.2.2 All GFE held by non-self accounting subcontractors should be included in the stocktake carried out by the main contractor.

B.4.2.3 Items held by non self-accounting subcontractors should be monitored by the main contractor to ensure that they are returned on time. On completion of the work, all GFE should be returned to the main contractor, unless special arrangements with the contract owning PT have been made to cover direct clearance from the subcontractor, in which case the main contractor should ensure that the PSA is correctly actioned.

B.5 Usage

B.5.1 Usage covers accounting for a range of occurrences: the movement of items within contractor premises, between main contractor and subcontractors, the return of items to the MOD, the disposal of redundant assets and accounting for lost or damaged items. As with other areas, the key requirement is to provide a complete audit trail and, especially, an authority for the usage.

B.5.2 The accounting and control requirement depends in part on whether the item is to be worked on, arises from work on an item, is for embodiment or loaned in support of contracted work. However, all GFE transactions should be recorded in the PSA.

B.6 Issues

B.6.1 Issues to Support Repair of CWIs

B.6.1.1 A Survey Report (or equivalent) will usually be raised for CWIs under repair etc. The Survey Report should record all main work to be carried out during the course of the repair and will provide the authority to issue CEIs. The Survey Report should record, where appropriate:

a) Missing items - components found to be missing during survey, which require replacement.

b) Defective items - components found to be defective during survey, which require replacement. A distinction should be made between items that are considered to be scrap and items that can be repaired.

c) Scrap items - components that are necessarily scrapped during repair, which require replacement.

d) Serviceable items - serviceable components that are removed and not re-embodied.

e) Liability - Refer to DEFCON 637.

B.6.1.2 The Survey Report provides the authorisation to issue new CEIs to replace those items a) to d) at **Clause B.6.1.1** above. These transactions should be recorded in the PSA by reference to either the source document authorising the issue, or to a stores requisition. If a stores requisition is used, it should be cross-referenced to the source document. The Survey Report also provides an audit trail of defective original components identified during the course of repair, for which the PT will provide the appropriate disposal instructions.

B.6.2 Over Issues

Over issues from the PSA, duplicate issues, incorrect issues etc. should be identified and promptly returned to store under cover of a stores return note. The items should be brought back on charge in the PSA by reference to the stores return note.

B.6.3 Self-to-Self Issues

If the contract authorises self-to-self deliveries a MOD Form 640, DEFFORM 129J or equivalent receipting record (as determined by DEFCON 5 or DEFCON 5J), should be raised and the delivery recorded in the PSA.

B.6.4 Issues to Inspection

An Issue to Inspection Record should be maintained of all items issued from store for inspection or test purposes. The items should be returned or cleared in a reasonable time period.

B.6.5 Issues to Replace Lost or Damaged Items

If replacement GFE is required, e.g. in respect of items lost or damaged after issue from store, full details should be recorded on the authorising source document, (e.g. reject note, Supplementary Survey Report) and the PT should be notified using PE (SA) Form 651.

B.7 Disposals

B.7.1 General

B.7.1.1 On receipt of disposal instructions the clearance of the stock balance should be posted to the PSA and MOD Form 650 used with the movement of the GFE.

B.7.1.2 A record is to be kept of the disposal of surpluses by reference to the contract or other authorising document.

B.7.2 Scrapped on Site

B.7.2.1 Items deemed beyond repair may be authorised by MOD to be scrapped on site by the contractor. All GFE scrapped should be properly controlled and covered by the correct documentation – MOD Form 650A. Items authorised by MOD to be scrapped on site should be recorded in the PSA by reference to the MOD Form 650A serial number.

B.7.2.2 Any proceeds from the sale of scrapped GFE are to be credited to the MOD in accordance with the terms of the relevant contract, or as advised by the appropriate MOD Contracts Branch. Contractors' procedures should provide an audit trail to demonstrate that the MOD has been credited with the appropriate sum.

B.7.2.3 Any proceeds from the sale of scrapped GFE are to be credited to the MOD in accordance with the terms of the relevant contract, or as agreed with the appropriate MOD Commercial Officer.

B.7.3 Items Expended in Work or Tested to Destruction

Contract Support Items issued for the purpose of being expended in test should be reported to the DBS by raising a MOD Form 650A. Full details and reference to the authority should be quoted on the MOD Form 650A and clearance details should be recorded in the PSA by reference to the MOD Form 650A.

B.7.4 Lost in Shop

Where GFE losses are identified other than during the Annual stocktake the loss is to reported using MOD Form 650A. The PSA should be adjusted for the loss on submission of the MOD Form 650A

B.8 Movements

B.8.1 General

B.8.1.1 All MOD authorised movements of GFE by the Contractor are to be made using MOD Form 650. The transaction is to be posted to the PSA on receipt of the Brown copy from the consignee

B.8.1.2 Non authorised movements and those to a non self-accounting subcontractor should not be covered by the MOD Form 650. Commercial paperwork should be used to cover these movements and the transaction is to be recorded on the PSA as a Forward Holding.

B.8.2 Non Receipt of Brown Copy

B.8.2.1 Non receipt of the MOD Form 650 brown copy will prevent the consignor from posting the movement to the PSA. Where the brown copy is not received from the consignee within an acceptable timeframe the Consignor is to seek authorisation from the PT to adjust the PSA, see Appendix B1.

Appendix B1 – MOD Form 650 Process

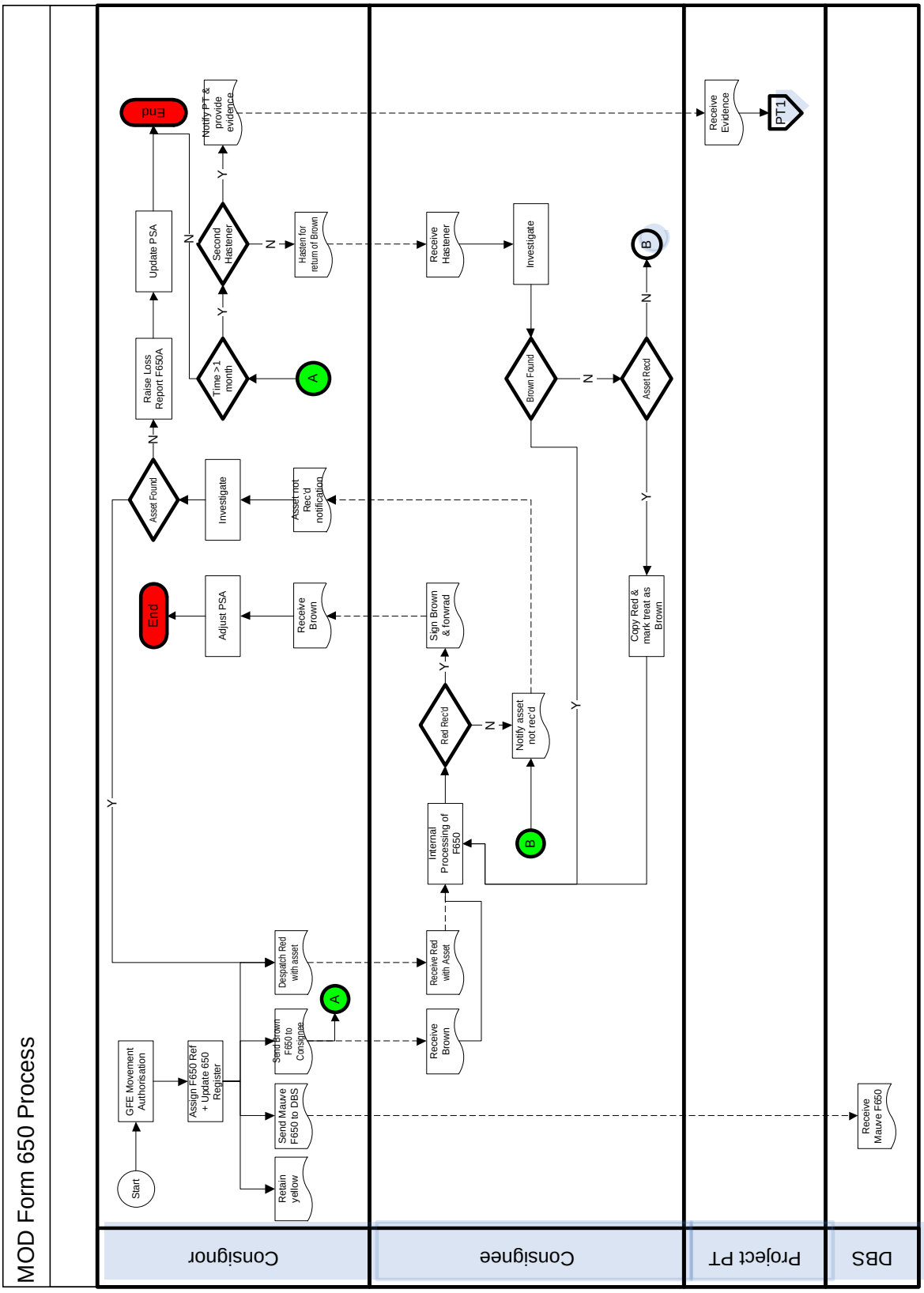

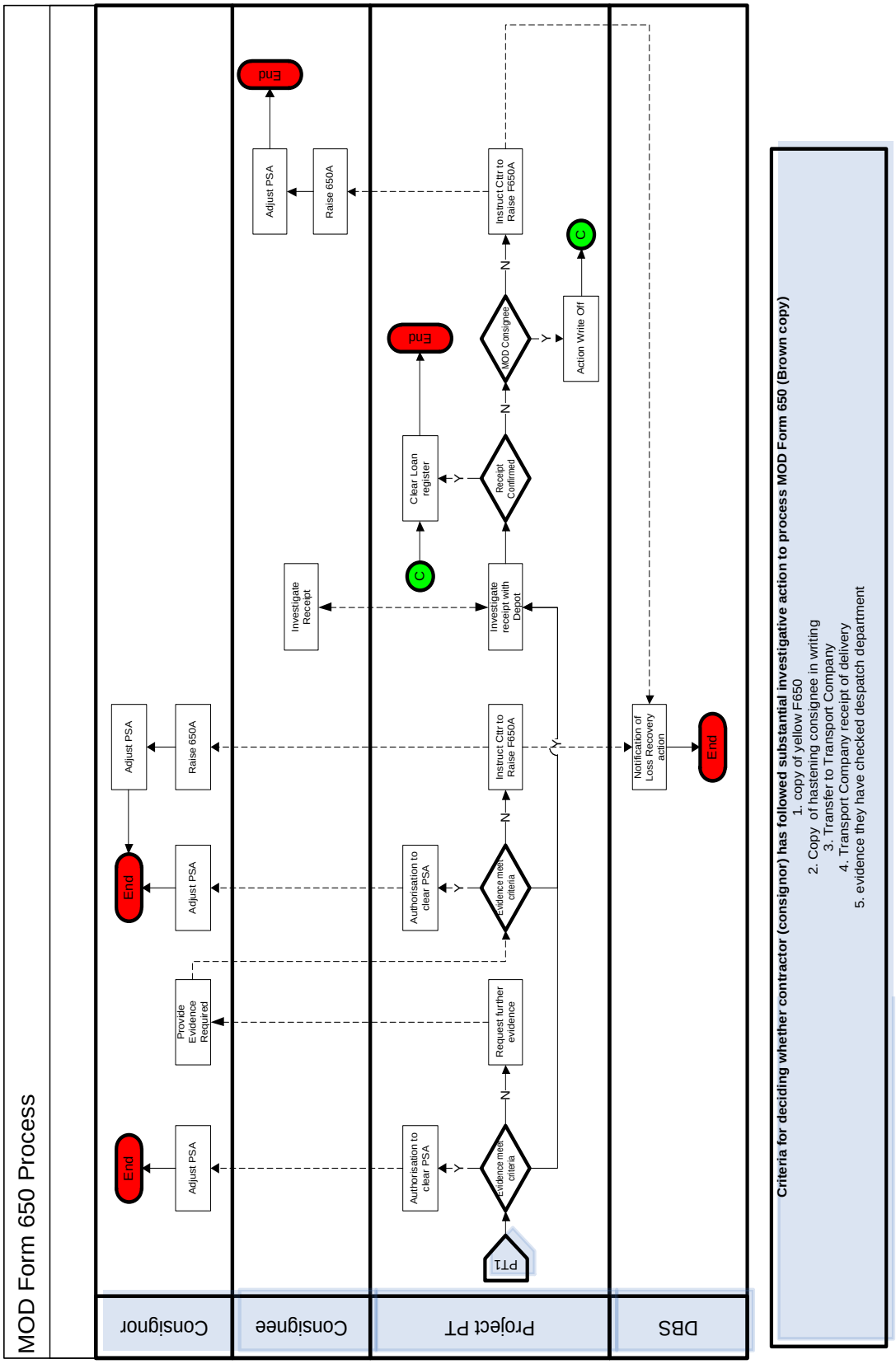
MOD Form 650 Process
Consignor
Consignee
Project PT
DBS
PT1
Evidence meet criteria
Y
N
Authorisation to clear PSA
Adjust PSA
End
Request further evidence
Provide Evidence Required
Adjust PSA
Raise 650A
Investigate Receipt
Adjust PSA
Raise 650A
End
Instruct Cttr to Raise F650A
Investigate receipt with Depot
C
Clear Loan register
End
Receipt Confirmed
MOD Consignee
Action Write Off
C
Notification of Loss Recovery action
End
Criteria for deciding whether contractor (consignor) has followed substantial investigative action to process MOD Form 650 (Brown copy)
1. copy of yellow F650
2. Copy of hastening consignee in writing
3. Transfer to Transport Company
4. Transport Company receipt of delivery
5. evidence they have checked despatch department

Annex C Role of the DIA - Audit of Public Store Account

C.1 Audit of Public Store Account

C.1.1 The DIA is the MOD branch responsible for ensuring the proper stewardship of GFE, including cryptographic equipment, in the contractor environment. To meet this remit, the DIA with DBS:

a) Provides a focal point for guidance to contractors and MOD staff on the proper stewardship of GFE;

b) Maintains records of GFE holdings and contractor certification of compliance with MOD GFE management requirements;

c) Ensures compliance with stocktaking requirements set out at **Clause 13**;

d) Undertakes cyclical and ad hoc audits of contractors holding GFE.

C.1.2 The cyclical audit programme is structured to reflect:

a) The number of contractors holding GFE;

b) The volume and value (where known) of individual holdings;

c) The perceived risks associated with the management of GFE holdings;

d) The resources available to the DIA.

C.1.3 DIA audit focuses on the PSA and the associated records and forms referenced in **Annex E**. Information or extracts from the PSA shall be made available to other areas of MOD, subject to reasonable request. All documentation raised or received in connection with PSA transactions shall be retained and made available for audit.

C.1.4 A contractor will usually receive a minimum 6 weeks' notice of an audit visit, and the DIA audit team will typically complete the audit within a working week. The contractor will be debriefed before the audit team leaves the site, and a report of the audit will usually be produced within 4 weeks of the debrief. The contractor is required to respond to the audit report, with a plan of action to meet DIA observations, as necessary, within a further 6 weeks. Details of the audit findings go to those PTs identified as owning GFE held by the contractor.

C.1.5 The DIA will consider undertaking ad-hoc audits when the level of losses or stocktake discrepancies causes concern, or at the request of, for example, PTs. Where DIA issues a 'Limited' or 'No Assurance' audit opinion, PTs may also require to audit the contractors' performance in order to provide assurance that contract conditions are being met.

C.1.6 In the event of a nil AAC32 return or notification from the contractor that their PSA is closed the DIA will undertake a closure of account audit of records and assets since the last DIA audit. This audit will enable the DIA to verify that all those GFE records are complete and that the contractor has consumed, returned or disposed of all MOD GFE held at the time of the last audit.

C.2 Audit Requirements

C.2.1 Annual confirmation from the contractor (using AAC 32 – ANNUAL CERTIFICATE FOR THE ACCOUNTING & CONTROL OF GOVERNMENT FURNISHED EQUIPMENT – Sample at APPENDIX E10 - is to be made of the following:

a) That the contractor has fully met his contractual obligations concerning the stewardship of GFE;

b) That the physical check of GFE held has been completed in accordance with this standard regarding conduct of the stocktake and the resolution and reporting of discrepancies;

c) The range, volume and (where possible) the value of holdings, together with information on the outcome of the stocktake, by loan category;

d) Holdings of GFE at self-accounting and non-self accounting subcontractors;

e) Any holdings covered by stocktaking dispensations;

f) Any holdings awaiting disposal instructions.

C.2.2 Contractors are required to submit their completed AAC 32 by the agreed reporting date. Further guidance on the conduct of the stocktake is at **Annex B**.

C.3 DIA Checklist for Assessing the Contractor's Public Stores Account

C.3.1 When assessing the contractors PSA, the DIA will usually consider the following:

a) Has a responsible person for GFE been nominated by the contractor?

b) Does the responsible person have access to all MOD contracts and amendments?

c) If there is no single nominated person, do the contractor's processes and organisation ensure adequate control of the PSA?

d) Are the procedures for the management of the PSA available to the DIA?

e) Has DIA been notified of any amendments to those procedures?

f) Is there a recognisable separation of duties between those responsible for the stock count and the reconciliation with the PSA records?

g) Are Fault Investigation items promptly cleared?

h) Are GFE consignments promptly checked against the contract requirement, any issue voucher or other accompanying record?

i) Are Discrepancy Reports raised promptly for any inconsistencies identified?

j) Are Discrepancy Reports progressed promptly and actions recorded?

k) Does the PSA record items issued for inspection, test or other instances of custodian control e.g. Forward Holdings?

l) Are records maintained of GFE transferred between assemblies during fault investigation or repair?

NOTE. This checklist is not necessarily exhaustive.

C.4 Training

C.4.1 Where more formal training is required above the guidance that can be provided at C.1.1.a) DES SEOC SCP-Materiel Accounting 1 should be contacted to discuss the requirement.

C.4.2 For details contact DES SEOC SCP-Materiel Accounting 1 using the address detailed at para 7.6.1:

Annex D Loan Categories Mapped Against Previous Loan Arrangements

Loan Categories	Contract Work Item	Contract Work Arising	Contract Support Item	Contract Embodiment Item
Description	The item/equipment being worked on	Item/sub-assembly removed from the Contract Work Item	Item provided to support work on the Contract Work Item	Item/sub-assembly embodied in the Contract Work item or Article to be delivered under the Contract
Previous Loan Categories	Contract Loan		Ordinary Loan	Embodiment Loan
Previous Scheme Titles	Contract Loan	Contract Loan Arising	Special Jigs Tools & Test Equipment DEFCONs 23 & 611	Contract Repair Support Procedures (incl. CCRSPW)
			Portable Specialised Support Equipment	Contract Repair Support Stock
			Installation Jigs for ship weapon systems – Profile 77	Contractors Bonded Stores Scheme
			Ordinary Loan	Embodiment Loan
			Repayment/ Prepayment	Embodiment Issue
				Ministry Supplied Materiel

Annex E Forms and Authorising Documents

The following MOD Forms may be used by contractors in the operation of the Public Store Account:

a) **DEFFORM 44A. Schedule of Surpluses with Main Contractor or Subcontractors.** Raised as required to seek disposal/scrap instructions in specific circumstances. A sample of this form can be found at **APPENDIX E1**.

b) **MOD Form 445**. **Discrepancy Report.** Used to report all instances of damage, deficiencies/surpluses in quantity and items which are not as detailed on the consignor's Issue Voucher (IV), as a basis for resolution and account adjustment as necessary. A sample of this form can be found at **APPENDIX E2.**

c) **MOD Form 458**. **Issue Transaction Summary.** A consolidated list of items dispatched from a MOD Supply Depot to a contractor in a specified period, used to verify receipt of items and initiate F445 Discrepancy Reports as required. A sample of this form can be found at **APPENDIX E3**.

d) **MOD Form 640. Advice and Inspection Note**. Used with delivery of a Contract Article under a contract subject to DEFCON 5. Raised to enable the transaction to be posted to the PSA and signed by the consignee to confirm delivery of the item. An extract of this form (the Payment & VAT Invoice Copy only) can be found at **APPENDIX E4**.

e) **MOD Form 650**. **Advice and Receipt Note.** Used to deliver or return an item of GFE. Raised to enable the transaction to be posted to the PSA and signed by the consignee to confirm receipt of the item. Controlled with a sequential serial number, retained in serial number order in support of the PSA, and copied to AMET. An extract of this form (Packing Copy only) can be found at **APPENDIX E5.**

f) **MOD Form 650A**. **Contractor's Advice of Equipment Scrapped On-Site or Lost in Shops**. Used when a contractor has been authorised to scrap GFE on site or to report lost GFE (other than losses identified during the Annual Stocktake). Raised to enable the transaction to be posted to the PSA. Controlled with a sequential serial number, retained in serial number order in support of the PSA, and copied to AMET. A sample of this form can be found at **APPENDIX E6.**

g) **PE(SA) Form 651. Notification of Government – Owned Equipment Rejected or Lost after Issue**. Raised as required to notify the relevant Production Branch as to the details of the equipment rejected or lost and to indicate what replacements, if any, are required. A sample of this form can be found at **APPENDIX E7**.

h) **PE(SA) Form 749**. **Schedule of Stocktaking Discrepancies.** Used to record unresolved deviations, found during the Annual Stocktake, between the physical count and the PSA record. Copies of PE (SA) Forms 749 are submitted with the associated AAC 32 Certificate (see **APPENDIX E10**). A sample of this form can be found at **APPENDIX E8.**

i) **PE (SA) Form 750 (Small) & PE (SA) Form 750 (Large)**. **Stocktaking Sheet.** Used to list all items included in the Annual Stocktake, with separate forms raised for each category of GFE held. The PE (SA) Form 750 shall provide full details of the items checked, together with the quantity of stock found and the quantity recorded on the PSA record (before the stock check). Samples of each of these forms can be found at **APPENDIX E9**.

j) **AAC 32**. **Annual Certificate for the Accounting & Control of Government Furnished Equipment (GFE)**. A form of contractor report used to confirm, on an annual basis as at a date agreed with the AMET, that contractual obligations concerning the accounting and control of GFE have been met. A sample of this certificate can be found at **APPENDIX E10.** The certificate presents:

   a. Certificate of stocktaking and reconciliation of the MOD PSA Records.

   b. Summary of GFE holdings under DEFCON 611 by loan categorisation, and associated discrepancies arising from the annual stocktaking.

   c. Information on subcontractor GFE holdings, where these exist.

d. Details of any items covered by an AMET stocktaking dispensation.

k) **DEFFORM 129J. The Electronic Business Delivery Form.** A form used to provide sufficient information to allow receipt details to be entered into appropriate MOD systems for inventory and non-inventory deliveries. It permits receipt points to identify, electronically receipt against an extant order, and aids resolution of discrepancies. This label / form does not support other information requirements such as storage considerations and quality checking which need to be provided separately. An extract of this form can be found at **APPENDIX E11**.

Ministry of Defence

DEFFORM 44 A
(Edn 04/05)

Schedule of Surpluses with Main Contractor or SubContractors

Main Contract Number

Main Contractor's Name and Address:	**SubContractor's Name and Address:**
Main Contractor's Reference Number:	**SubContractor's Reference Number:** **SubContractor's Order Number:**

Location(s) of Items Listed:
NB If more than one location is involved each location should be allocated a letter reference and items annotated accordingly in Col 1 of the Schedule to DEFFORM 44A.

Notes

1. The Contractor/SubContractor should read DEFFORM 43 before completing the Schedule to DEFFORM 44A.
2. Any surplus items known to be required by the Authority should be specially annotated in Column 3 of the Schedule to DEFFORM 44A.
3. Column 5 of the Schedule to DEFFORM 44A need only be completed where surplus materials are listed.
4. The Main Contractor is required to add his Counter-signature to any lists furnished by the SubContractor in the Certificate below.
5. Schedules should be prepared in quintuplicate and after counter-signature by the Quality Assurance Authority named in the Contract, four copies should be sent to the Contracts Branch. The Contractor should retain the fifth copy for his own use.

Certificate to be Completed by the Main Contractor and (if appropriate) by the SubContractor

We Hereby certify that the following Schedule (sheets) represents to best of our knowledge and belief a true statement of the description, quantities and degrees of completion of all items of purchase or manufacture rendered surplus to the requirements of the Contract. The Schedule omits spoilt work, scrap and rejected materials and also excludes surpluses which we have elected to retain at no cost to the Authority, those being the subject of a separate notification to the Authority.

Main Contractor's Signature: **Name and Office of Signatory:** **Date:**

SubContractor's Signature: **Name and Office of Signatory:** **Date:**

Certificate to be completed by Quality Assurance Authority

I herby certify that the list of items scheduled overleaf are to the best of my knowledge and belief correct.

Signature: **Branch:** **Date:**

APPENDIX E1 – DEFFORM 44A (Reverse)

Schedule of Surpluses

Schedule to DEFFORM 44A (Edn 04/05)

Main Contract No _____ Sheet _____ Of _____ Sheets

1	2	3	4	5	6	7	8	9				10	11
Item No	Part No. & Service Ref. No.	Article Description	Material	Specification, Analysis & Quality	Size	State or % Complete	Quantity	Approximate Weight				Actual or Estimated Cost	For Official Use
								Tons	Cwts	Qtrs	Lbs		

APPENDIX E2- MoD form 445

MOD Form 445 (Revised 00/14)

DISCREPANCY REPORT
For Government Furnished Equipment

Contract Number:

DR Serial Number

Note:Address is as given DEFFORM 111 4(a) Supply/Support Management

From: (Contractor)

To: (Appropriate PT Name & Address)

Contractors Name:

MOD Stock Refeence / NSN

Short Item Name

Details of Discrepancy: (State whether: Incorect Qty, Incorrect Item, Damaged Item etc.

- [ ] Wrong Item
- [ ] Incorrect Serial Number
- [ ] Material Condition (MATCON)
- [ ] Missing Technical Documentation
- [ ] Incorrect Quantity
- [ ] Damaged Item

If Item Damaged was packaging Damaged or insecure **Y/N**
Is a Replacement item Required Y/N
Carrier Details:

Date Goods Received:
Delivery Note Number:
Delivery Note Date:
Date Stores Unpacked:

Continued on Sheet2

APPENDIX E2- MoD form 445 (Reverse)

Contractor's Signature:

Date:

Print Name:

Telephone Number:

Part 1

Additional details of:Discrepancy

Part 2

PT Statement of Investigation:

Signed:

Date:

Rank:

Tel No:

Confirmation of Issue Replacement:

APPENDIX E3 - MoD form 458

MOD FORM 458
Revised 09/03
PPQ = 1

ISSUE TRANSACTION SUMMARY

THE FOLLOWING TRANSACTIONS HAVE BEEN RECORDED IN THE WEEK INDICATED

From:

To: (Accounting Unit)

UIN/CNAC/NCAGE

Consignee (if not Accounting unit)

UIN/CNAC/NCAGE

Week Ended

Serial No.

Page No.

ISSUE VOUCHER		MOD Stock Reference		D of Q	Quantity	Short item Name/ Despatch Details				Demand		Value	P V C	Customer's Own Ref./ PE Project Code/ Man. Acctg. Code/ Task no./ETC.
Serial No.	Date	DMC	NSN or other reference			Meth'd	Date	Supply Source Code	ACC	Serial No.	Date			

NOTE: Queries, including Discrepancy Reports, should be addressed to the Issuing Depot.

CERTIFICATE

✻ Delete as appropriate

✻ Except where indicated otherwise, the issues listed above have been accounted for in accordance with current instructions.
✻ The extracts shown above have been received and distributed to the Accounting Officer concerned.

Date ..... Rank/grade ..... Signature .....

APPENDIX E4 - Mod form 640 (Payment & VAT Invoice Copy Only)

Ministry of Defence
Advice & Inspection Note
MOD Form 640
(Revised 02/05)

Payment & VAT Invoice Copy

- Send to consignee with the green copy by post immediately the stores are on route or see Contract for alternative instructions.
- Consignee to receipt and return to consignor.
- **CONSIGNEE MUST ENSURE THAT THE UIN BOX IS COMPLETED.**

MOD Form 640 Brown Copy

252151 Y

Consignor's Reference | Is contract ex - works? Yes / No | Is this final delivery under this contract? Yes / No

From : (Name & Full Address of Consignor) (as per MOD Contract Documents)

Number & Nature of Packages | **To:** (Name & Full Address of Consignee)

Type of Supply

Package Markings

Method of Transport (including Rail Track Number)

VAT Reg Number

SALES

VAT Tax Point

Contact Name

Tel No

Date Goods Despatched

Date of Invoice

1 Contractor Code and Address Code

2 Contract Number

Order/ Warrant No

Date

3 Contractor's Bill Invoice Ref. (max. 10 characters)

Contract Item No	MOD Stock Reference (as stated in the Contract)	Contract Description	Pre Packed Quantity (PPQ)	Pkg Code	Denom of Qty	Quantity Despatched	Qty expd in satis tests	Major Non-Conformance No Cumulative Deliveries Discrepancies	Unit Price (excluding VAT)	Total Price (excluding VAT)

Contractors Certificate

Certified that the whole of the Articles detailed hereon (including packaging if applicable) conform in all respects to the Specifications, drawings & Contract. Circle relative thereto, (except as stated in the Major Non - Conformance column), and that the Articles have been inspected & tested in accordance with the Conditions & requirements of this Contract

Signature & Date

Authorised Representative

Packers Certificate (If applicable)

Certified that the whole of the Articles in the Qty despatched column have been cleaned, identified and packed in accordance with the Packaging Instruction Sheet &/or sample pack approved by the Approving Authority

Signature & Date

Authorised Representative of Mission

Receipt

- Government Departments sign here, other consignees sign overleaf
- **Government Consignees MUST insert correct UIN before receipt**

(Establishment Stamp)

6 Unit Identity Number (UIN)

Date Brown F640 received or Goods if late

Date Receipted Brown F640 Posted out to Contractor

Signature

Name (in CAPITALS)

Tel No

For DBA Use Only

4 Total (excluding VAT)

5 VAT @ %

7 Total

For Bill Paying Branch Use

Posting Code | Fin Area | Tab Area

8 D | 9 | 10

11 MOD Form 640 Serial Number

252151 Y

12 Date of Certification

MOD Form 640 Brown Copy

APPENDIX E4 - MOD Form 640 (Payment & VAT Invoice Copy Only - Reverse)

Instructions to Consignor Contractors

Payment

1. On return of this copy duly receipted by the consignee, you should complete the price columns and other invoicing details. The form should then be sent to the Bill Paying Authority named in the contract, in accordance with his instructions.

Damage, discrepancies or non-delivery

2. You will be informed by the consignee of any loss or damage to the consignment and this copy of the A and I Note will have been noted to show the quantity actually received including condition where applicable. Where the contract provides for delivery ex-works, FOR or FOB, responsibility for claiming on the carrier (where necessary) rests with the Ministry of Defence but where the contract provides for delivery to final destination the responsibility rests with you.

3. On the receipt of notification from the consignee of loss, damage or non-delivery of goods delivered ex-works, FOR or FOB, you should:
a. verify that the full quantity was actually packed and that all packages were duly handed over to the carrier;
b. notify the carrier in cases where it is thought that loss or damage has occurred in transit;
c. render your bill on this copy of the A and I Note for the full quantity shown in the 'Quantity Despatched' column, plus the quantity (if any) shown in the 'expended in satisfactory tests' column. If the whole consignment fails to arrive at its destination your bill should be supported by evidence of despatch.

If subsequent to payment for the full quantity, liability for the discrepancy is ascribed to you, the value of the discrepancy will be recovered from you by the Department.

4. In the event of loss or damage to a consignment where the contract provides for delivery to final destination, you should render your bill on this copy of the A and I Note for the quantity of stores received in good condition, for which a receipt has been given.

Returnable Packages

5. If for special reasons returnable packages are used by the contractor, the packages should be separately itemised on the Form 640 in the same way as the stores which they contain, the entry being clearly marked 'credit on return'.

Overseas Deliveries

6. See reverse of Yellow Copy for details of special arrangements which apply to overseas deliveries.

Instructions to Non - Government Consignees

The receipt block below must be completed and this copy despatched without delay to the consignor.

If you have been advised of the MOD Unit Identity Number (UIN)applicable to this consignment please complete the UIN field below.

Receipt

Date Brown F640 received or Goods if later

Goods received for use on Contract No

Terms of issue

Unit Identity Number (UIN)

Signature

Date

Contractor and Address (if different from on the face).

Date Brown F640 Posted out to Contractor

APPENDIX E5 - Mod form 650 (Packing Copy Only)

ADVICE and RECEIPT NOTE - PACKING COPY

Ministry of Defence

MOD Form 650 (GFE)

(For Movements Only)

(for completion see DEF STAN 05-99)

Send to Consignee with goods, Consignee to retain as STORE ACCOUNTING COPY

RED COPY

Carrier Details	Number & Nature of Packages	Date of Despatch	Serial Numbers	Period of Account (Financial Year)
				14-15

From: Name & Full Address of Consignor	Fault Investigation (MOD 760 No)	To: Name & Address Full Address Consignee
	MOD Contract No (or Other Authority)	

Code	TRANSACTION CODE
A	Ex Embodiment Loan - Transfers of Returns
B	Ex Embodiment Loan - Defective Returns
C	Ex Embodiment Loan - Damaged Returns
D	Ex Ordinary Loan or Loan with change
E	Ex-Contract Loan Transfer or Returns
F	Other Movements
G	Transfer of Contract

Ex Contract No:

Nato Stock No/Part No.	Description	Serial No	DofQ	Code	Qty	Serv	Non-Serv	Remarks

RECEIPT WHEN CONSIGNEE IS A CONTRACTOR	
Received quantities shown above have been brought on charge and posted to PSA	
Signature	
Date	

RECEIPT WHEN CONSIGNEE IS A GOVT DEPT (Including Service Unit)			
Received Quantities shown above			
Signature		Date	
Items Received & Brought to Account			
Signature		Date	

RECEIPT DETAILS		
Consignment Number		
Date Received		
	Initials	Date
Goods Unpacked & Checked		
Brown Copy signed & Returned		

APPENDIX E6 - Mod form 650A

Contractor's Advice of Equipment Scrapped on Site or Lost in Shops

MOD GFE Form 650A

Revised 05/15

From: Name & Full Address of Consignor

NCAGE

Loan number if applicable

Contract number

To:

DBS ADMT

4th Floor, Piccadilly Gate,

Store Street'

Manchester,

M1 2WD

Serial Number

PT/DT Contact Details

Code	TRANSACTION CODE
A	CEI - Contract Embodiment Item - Scrapped on site
B	CEI - Contract Embodiment Item - Losses in shops
C	CWI - Contract Work Item - Scrapped on site
D	CWI - Contract Work Item - Losses in shops
E	CSI - Contract Support Item - Scrapped on site
F	CSI - Contract Support Item - Losses in shops
G	Other Losses

Note: Address is given at DEFFORM 111 4(a) Supply/Support Management

NSN/Part No. (for JTTE insert tool No.)	Description	DofQ	Qty	Code	PT Authority to scrap held **Y/N**	Nature of defect or damage, with circumstances or

Signature of Contractor

Date

Transaction posted to PSA

Register in Series (Date/Stamp)

APPENDIX E7 - GFE Form 651

NOTIFICATION of GOVERNMENT OWNED EQUIPMENT REJECTED or LOST AFTER ISSUE

Company Name And Address

Send this form to the PT in accordance with DEFFORM 111

From:	To:

Originally Received From:

On Receipt Voucher No:

On Form 640 No:

Ex Contract No:

Contract No: Equipment issued Loan Items.

Item No:	Nato Stock Number:	Description:	Qty Rejected	Qty Lost	Nature of defect Fault or Damage if any, with circumstances, or other remarks.	Qty for replacemnet

Special Instructions/Specific Instructions to Contract:

Disposal Intructions:		Contractors Signature:		PT Authorisation for Replacement:	
PT:		Signature		PT:	
Date:		For Company:		Signature:	
Signature:		Date:		Date:	

APPENDIX E8 - form 749

SCHEDULE OF STOCKTAKING DISCREPANCIES Loan

Establishment / Contractor's Name: _ _ _ _ _ _ _ _ _ _ _ _ _ _ _ _ _ _

Serial No:

Full Address: _ _ _ _ _ _ _ _ _ _ _ _ _ _ _ _ _ _

Stocktaking Year: 14-15

Store:

Date of Stocktake	NSN/ Part Number (for JTTE Insert Tool No)	Description	Stock Found	Stock Record Balance	Stock Record Adjustment		Serial No of MOD Form 750 Stocktaking	Contract Number	Unit Price (£) (MOD use only)	Value (£)	Remarks
					+	-					

Signature: _ _ _ _ _ _ _ _ _ _ _ _ _ _

Print Name: _ _ _ _ _ _ _ _ _ _ _ _ _ _ _ _ _ _

Official Position: _ _ _ _ _ _ _ _ _ _ _ _ _

Telephone No: _ _ _ _ _ _

Stock Record Adjustment

Signature: _ _ _ _ _ _ _ _ _ _ _ _ _ _ _ _ _ _

Date:

If the item's shown on this form are discrepancies found on opening "Preserved, identified & packaged" stores which originated from MOD stores, the contractors signature is required!

APPENDIX E8 - form 749 (Reverse)

Date of S'take	Nato Stock Number (NSN) otherwise Part No. (For JTTE insert Tool No)	Description	Condition of Items	Stock Found	Stock Record Balance	Stock Record adjustment		of PE(SA)F750 - Stocktaking Sheet	Contract No	Unit Price (£s)	Value (£s)	Remarks
						+	-					
1	2	3	** 4	5	6	7	8	9	10	11	12	13

Signature:

Please print name -

Official Position: Tel No:

Stock Record Adjusted

Signature: Date:

If the items shown on this form are discrepancies found on opening "preserved, identified and packaged" stores which originated from MOD stores, the following two signatures are required:

Contractor's representative:

Countersignature of
MOD Quality Assurance Representative:

APPENDIX E9 - form 750

DEF STAN 05-099 Part 1

MOD Form 750 Appenxix E9

STOCKTAKING SHEET

Revised (06/2014)

Establishment / Contractor's Name:

Address:

Seial Number:

Date of Stockholding:

*** Store:**

Stock Location	Nato Stock Number, Section & Ref No if allocated otherwise pat No.	Description	DofQ	Condition of items	Stock Found	Stock Recod Balance	Discrepancies		Serial No. of Form 749 - Schedule of Discrepancies	Remarks
							+	-		

*** Contractors will use separate forms for each tem of issue ie. Embodiment Loan, Contract Loan, Odinary Loan & also fo each store. Eg. CRISP Store,**

APPENDIX E10 – AAC 32

AAC 32

MINISTRY of DEFENCE
ANNUAL CERTIFICATE FOR THE ACCOUNTING & CONTROL OF GOVERNMENT FURNINSHED EQUIPMENT (GFE)

I certify that we have fully met our contractual obligations concerning the accounting and control of GFE.

I confirm that your requirements regarding the recepit , usage and final delivery or disposal of GFE contained within the relevant **Defence Contract Conditions**, and further detailed in DEFENCE STANDARD 05-99 have been fully completed with except as stated in the attachment to this certificate.

I confrim that formal company procedures and systems are in operation for the accounting and control of GFE and that an auditable Public Store Account (PSA) exists.

CERTIFICATE OF STOCKTAKING AND RECONCILIATION OF MINISTRY OF DEFENCE PUBLIC STORE ACCOUNT RECORDS

PERIOD ENDING _____

I certify that a physical check of all GFE held under an authorising document has been completed in accordance with DEFENCE STANDARD 05-99.
Items covered by dispensation reference: _____ have not been counted, but the stock lines concerned are included in the relevant totals on page 2. (insert dispensation reference, or delete sentence if inapplicable). Quantities have been reconciled with our stock records and the results, which include information regarding stock found, surpluses and deficiencies, entered on MOD Form F750 and MOD Form F749 forms or equivalents. Stock records have been noted and adjusted in accordance with your requirements.

Details of stocktaking results, including the serial numbers of the relevant MOD Form F750 and MOD Form 749's or equivalents, and where available the estimated value of GFE held are noted on page 2. The attached MOD Form F749 or equivalent represents the final results of our stocktaking exercise for this period and all discrepancies have been fully investigated and validated. Liability is accepted for the listed deficiencies.

Signed: _____ on behalf of the company

Name (block letters): _____

Official Position: _____

Address: _____ Tel No: _____

_____ Fax No: _____

_____ Date:

_____

Post Code: _____

Please Return to: **DBS Finance ADMT - Assets in Industry 2**
Level 4, Piccadilly Gate, Store Street,
Manchester M1 2WD.

Tel No: **44 (0)161 233 5397**
Email: **DBS Fin-admt-Acc Ind1**

Quoting Reference Number: GN/

STOCKTAKING RESULTS FOR YEAR FROM _____ **TO** _____

Loan Type (Delete if Necessary)	Total Line Items Held	Total Line's Stock-Checked	Total Line Item's * Surplus	Total Line Item's * Deficient	Total Line Item's * Discrepant
Contract Embodiment Loan					
Contract Work Item					
Contract Work Arising					
Contract Support Item					
TOTALS					

MOD Form F749 or equivalent's Ser No's **	

Approximate volume of GFE receipt & issue transactions per month: _ _ _ _ _ _ _

Estimated value of GFE: £ _ _ _ _ _ _

* A Line Item is all items with the same NSN/part number.

** All MOD Form F749's or equivalent shall quote PT reference where known, in addition to MOD Contract Number.

SELF ACCOUNTING SUB-CONTRACTOR / NON SELF ACCOUNTING SUB-CONTRACTOR

1. Do you hold GFE as a Sub-Contractor under self-accounting arangements?

YES/NO

If YES please state Name & Contract Number of the prime contractor & confirm inclusion of all GFE held as issued poperty under DEFCON 611 in the totals declared on page 2 of 3

Prime Contractor	Contract No	Included in stocktaking results **Y/N**

2. Have you issued GFE to any non-self accounting subcontractors?

YES/NO

If YES please state the name of the subcontractor, your contract number and confirm inclusion of stocktaking details in the totals declared on page 2 of 3.

Subcontractor	Contract No	Items have been included ion the stocktaking results **Y/N**

3. Do you hold loaned equipment as a non-self accounting subcontractor?

YES/NO

If YES please state prime contractors name and details of contract or contracts involved. Also confirm these items are not included in the totals declared on page 2 of 3.

Prime Contractor	Contract No	Items have been included ion the stocktaking results **Y/N**

APPENDIX E11 The Electronic Business Delivery Form

MINISTRY OF DEFENCE

DEFFORM 129J
(Edn 07/08)

Shipping Form Design

From: 777 ANGEL ROAD St PAULS EDENVILLE HE6 40N	**Unique Identifier:** 823456-8234/823458234/82349245	
Via:	**To:**	
Demand / Task Reference: *BC278787*		
Description:		
RDD:	**SPC:**	**UN Haz Code:**
Date Shipped:	**Batch Number:**	**Piece Number:**
Weight:	**Dimensions:**	
NSN: *5120996260953*		
IMC/DMC:	**D of Q:**	**Qty in Package:** **Total this Delivery:**

NB. Four fields have been completed for illustration purposes only.

Section 3

Normative References

1 The publications shown below are referred to in the text of this standard. Publications are grouped and listed in alpha-numeric order.

Note: Def Stan's can be downloaded free of charge from the DStan web site by visiting **<http://dstan.uwh.diif.r.mil.uk/>** for those with RLI access or **<https://www.dstan.mod.uk>** for all other users. All referenced standards were correct at the time of publication of this standard (see A.2, A.3 & A.4 below for further guidance), if you are having difficulty obtaining any referenced standard please contact the DStan Helpdesk in the first instance.

Def Stans

Number	Title

STANAGs

Number	Title

Allied Publications

Number	Title

Other References

Standard Type	Standard Name
Other	DEFCON 5 MOD Forms 640, Advice and Inspection Notes
Other	DEFCON 5J Unique Identifiers
Other	DEFCON 23 Special Jigs, Tooling and Test Equipment
Other	DEFCON 501 Definitions and Interpretations
Other	DEFCON 601 Redundant Materiel
Other	DEFCON 609 Contractor's Records
Other	DEFCON 611 Issued Property
Other	DEFCON 637 Defect Investigation and Liability
Other	DEFCON 694 Accounting for Property of the Authority

Other	DEFFORM 111 Appendix - Addresses and Other Information
Other	DEFFORM 129J The Electronic Business Delivery Form

2 Reference in this Standard to any normative references means in any Invitation to Tender or contract the edition and all amendments current at the date of such tender or contract unless a specific edition is indicated. Care should be taken when referring out to specific portions of other standards to ensure that they remain easily identifiable where subsequent amendments and supersession's might be made. For some standards the most recent editions shall always apply due to safety and regulatory requirements.

3 In consideration of clause A.2 above, users shall be fully aware of the issue, amendment status and application of all normative references, particularly when forming part of an Invitation to Tender or contract. Correct identification of standards is as defined in the ITT or contract.

4 DStan can advise regarding where to obtain normative referenced documents. Requests for such information can be made to the DStan Helpdesk. Details of how to contact the helpdesk are shown on the outside rear cover of Defence Standards.

Definitions

For the purpose of this standard, ISO/IEC Guide 2 ‘Standardization and Related Activities – General Vocabulary’ and the definitions shown below apply.

Definition	Description

Abbreviations

Abbreviation	Description

This page has been intentionally left blank.

©Crown Copyright 2017

Copying Only as Agreed with DStan

Defence Standards are published by and obtainable from:

Defence Equipment and Support

UK Defence Standardization

Kentigern House

65 Brown Street

GLASGOW

G2 8EX

DStan Helpdesk

Tel: +44 (0) 141 224 2531

Fax: +44 (0) 141 224 2503

Internet e-mail: enquiries@dstan.mod.uk

File Reference

The DStan file reference relating to work on this standard is 24/99/1.

Contract Requirements

When Defence Standards are incorporated into contracts, users are responsible for their correct application and for complying with contractual and statutory requirements. Compliance with a Defence Standard does not in itself confer immunity from legal obligations.

Revision of Defence Standards

Defence Standards are revised as necessary by an up-issue or amendment. It is important that users of Defence Standards ensure that they are in possession of the latest issue or amendment. Information on all Defence Standards can be found on the DStan Websites https://www.dstan.mod.uk and http://dstan.uwh.diif.r.mil.uk/, updated weekly. Any person who, when making use of a Defence Standard, encounters an inaccuracy or ambiguity is encouraged to notify UK Defence Standardization (DStan) without delay in order that the matter may be investigated and appropriate action taken.

DSTAN®
UK Defence Standardization