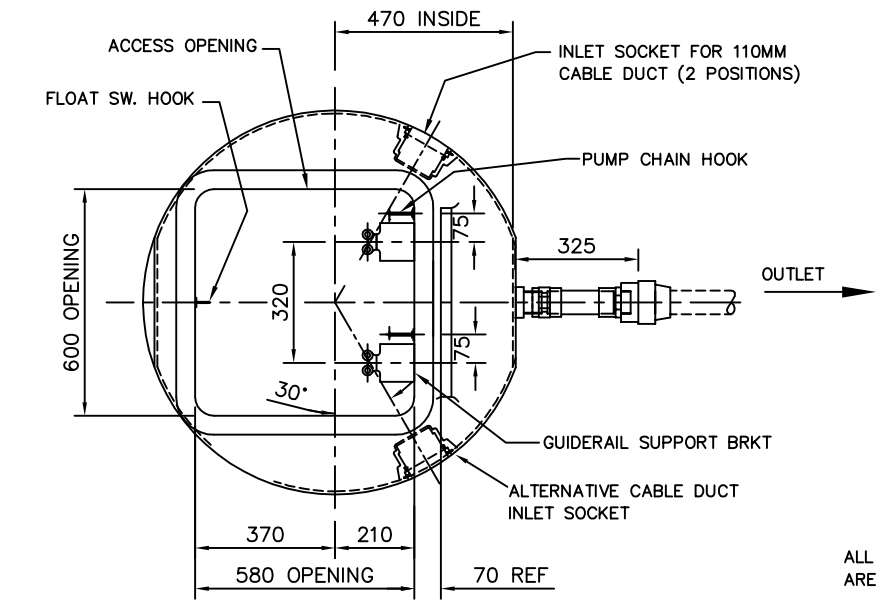

PLAN ON 'C'
(CONCRETE SURROUND OMITTED FOR CLARITY)

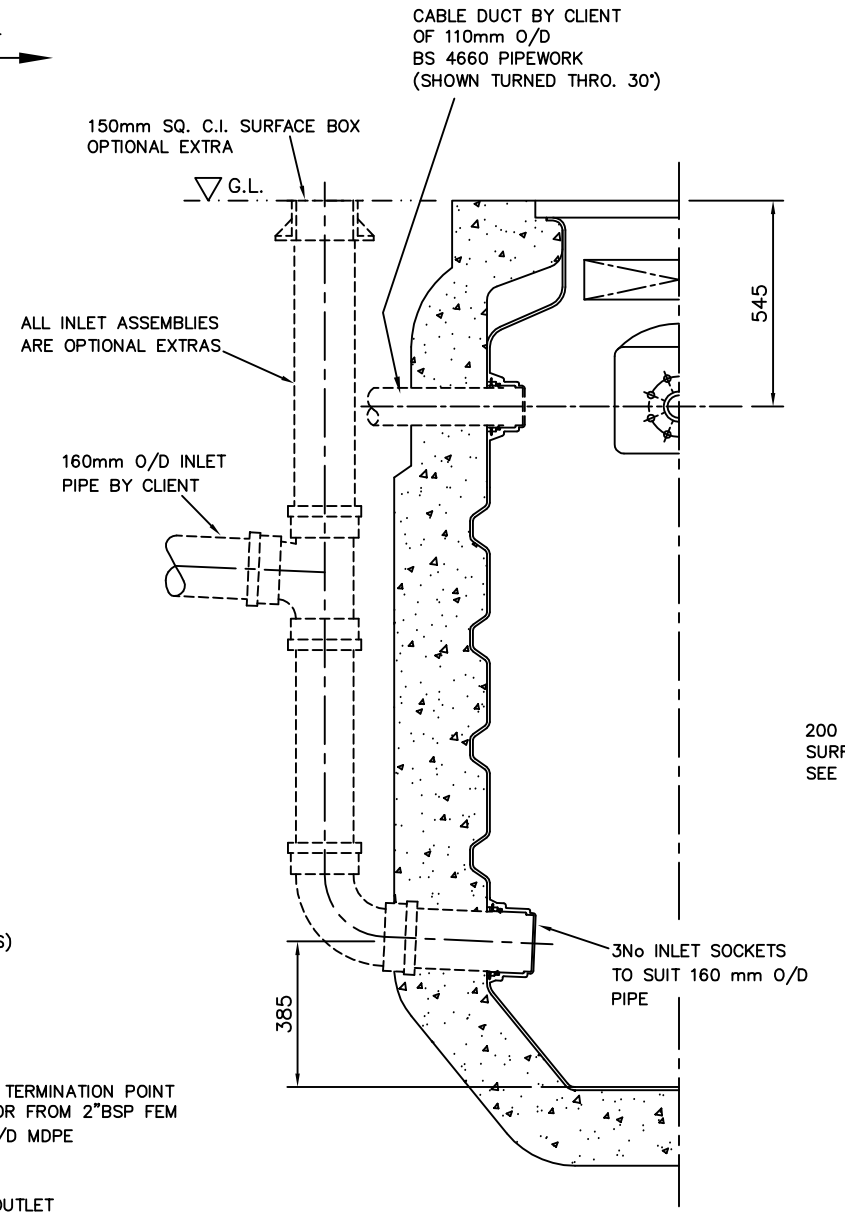

SECTION ON 'A'–'A'

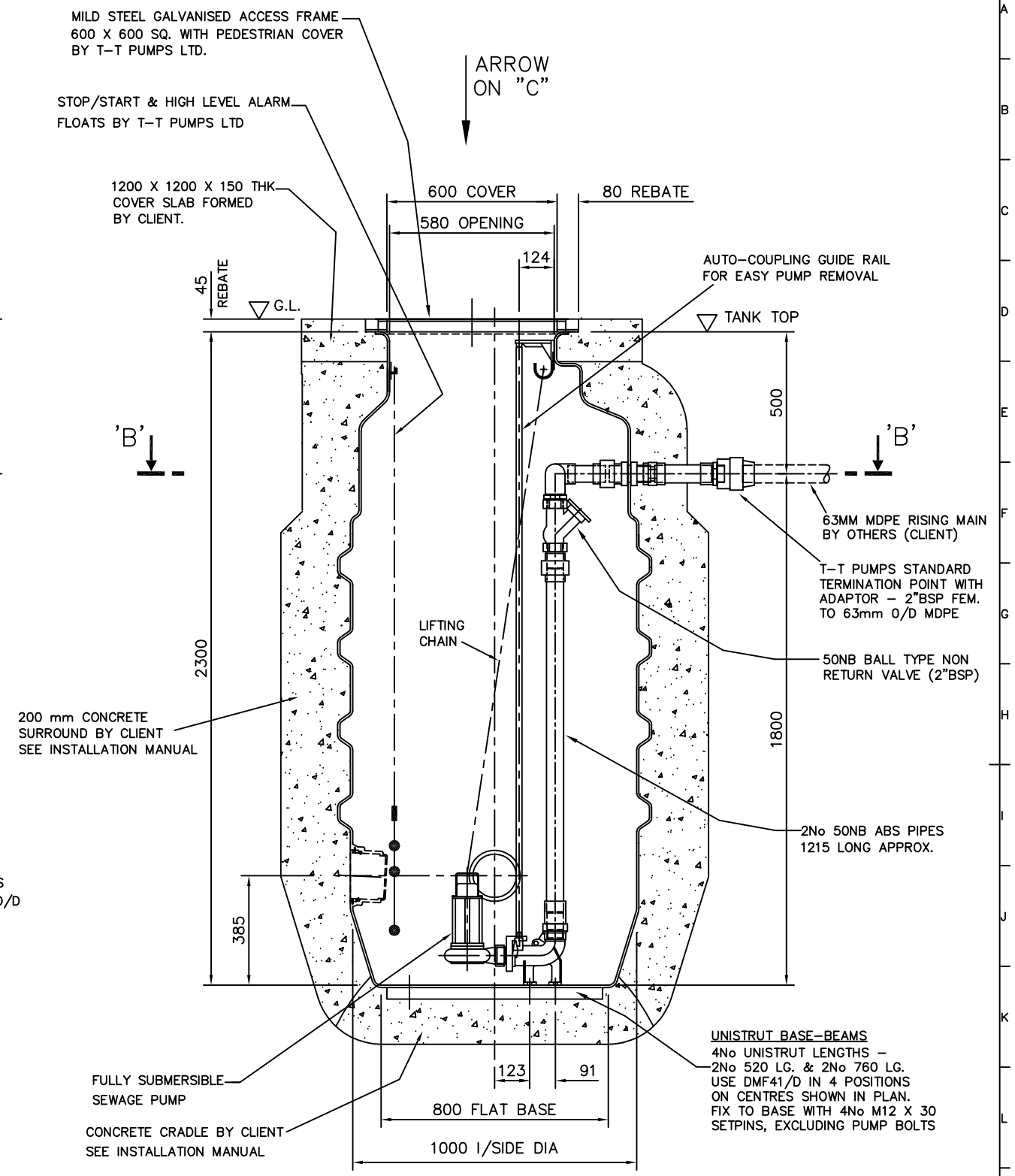

SECTIONAL ELEVATION ON OUTLET CENTRE LINE

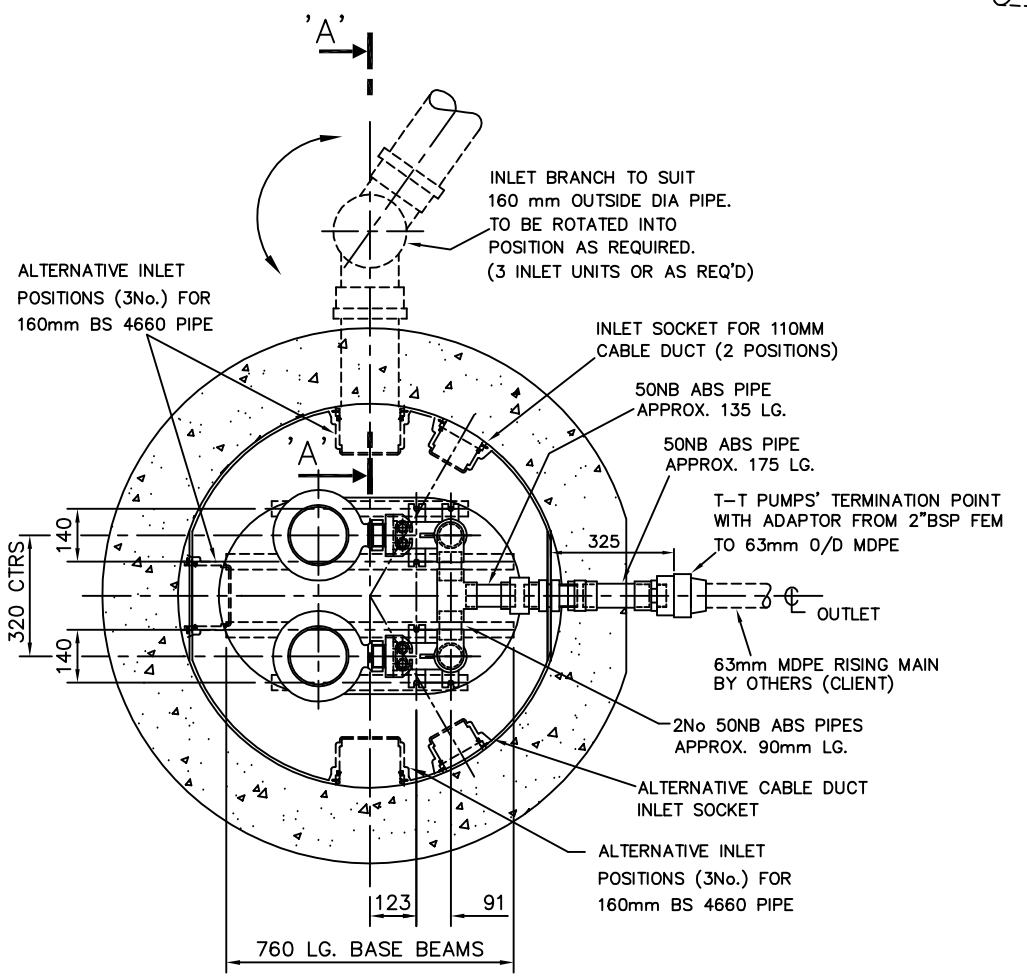

SECTIONAL PLAN VIEW 'B'–'B'

NOTES

1. POLYETHYLENE TANK SUPPLIED C/W PIPEWORK & VALVES TO TERMINATION POINT, FOR CLIENT TO INSTALL INTO GROUND – SEE SEPARATE INSTALLATION DATA SHEET.
2. ALL CIVILS WORK TO BE BY CLIENT.
3. PUMP STARTER OR CONTROL PANEL MUST BE FIXED INDOORS OR IN A WEATHERPROOF ENCLOSURE.

UNCONTROLLED DRAWING
PLEASE CHECK WITH T–T PUMPS LTD THAT THIS DRAWING IS OF THE LATEST ISSUE

ISSUE	AMENDMENT	DRAWN BY	APPROVED BY	DATE
G	NEW AUTOCOUPLING & BALL TYPE NRV SHOWN	D.C.	D.J.P.	22.09.05
F	ADDITIONAL UNION SHOWN ON PIPEWORK	D.C.	D.J.P.	08.10.04
E	INLET SOCKET & CABLE DUCT SOCKET RE–DESIGNED	D.C.	T.R.P.	02.04.04
--	CABLE DUCT SOCKET RE–POSITIONED IN PLAN VIEW	--	--	--
D	PUMP LISTING DELETED	D.C.	T.R.P.	23.10.02
C	TERMINATION POINT EXTENDED BEYOND CONCRETE SURROUND	D.C.	T.R.P.	21.01.02
B	PUMP DESIGNATIONS UPDATED	D.C.	T.R.P.	05.06.01
A	SIZE OF CABLE DUCT ENTRY AMENDED	D.C.	T.R.P.	29.11.00

ENSURE THAT THIS IS THE LATEST ISSUE
DIMENSIONS IN mm UNLESS STATED OTHERWISE
TOLERANCE EXCEPT WHERE OTHERWISE STATED ± 5mm
DO NOT SCALE — IF IN DOUBT ASK

THIS DRAWING IS THE PROPERTY OF T–T PUMPS LTD. IT MUST NOT BE COPIED, LOANED OR INFORMATION CONTAINED HEREIN BE TRANSFERRED TO A THIRD PARTY WITHOUT WRITTEN CONSENT OF T–T PUMPS LTD.

CLIENT APPROVAL

© Copyright T–T PUMPS Ltd. 2003

TITLE: GENERAL ARRANGEMENT FOR VENUS DUAL (50 NB ABS P'WK) PACKAGE PUMPING STATION

CLIENT

SCHEME

DRAWN BY	P.S.T.
APPROVED BY	R.D.
DATE	06.10.99
ORIGINAL SCALE @A1	1:10

T·T PUMPS
WOORE CW3 9RU ENGLAND
TEL. 01630 647200 FAX. 01630 642100

PROJECT NUMBER	DRAWING NUMBER	ISSUE	SHEET 1 OF 1
STD.	PP/5200/G		

TT 060 09.98