DO NOT SCALE

Plan view of openings from outside.

DO NOT SCALE

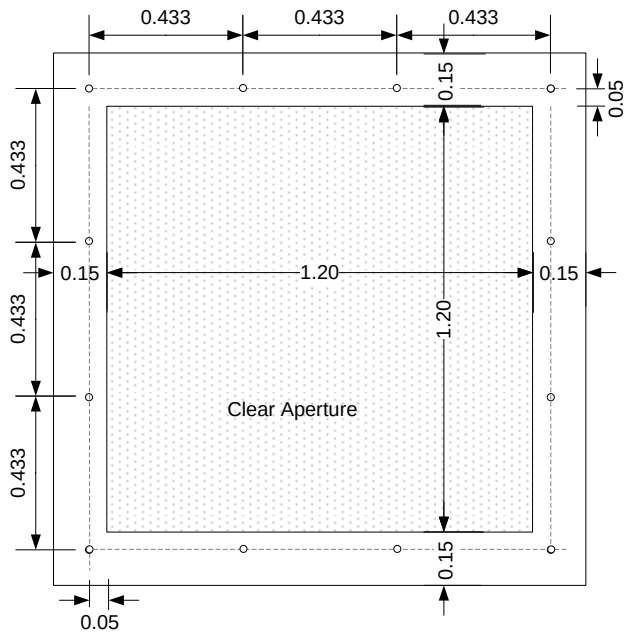

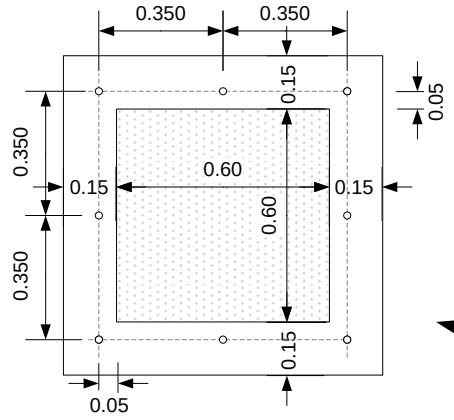

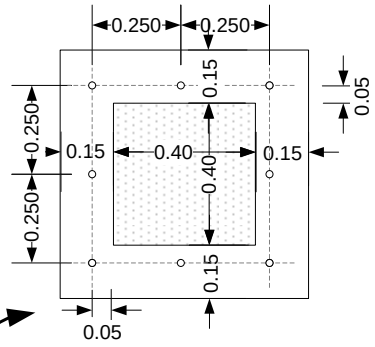

Box or U channel section welded to container roof

1.2x1.2M opening

12 holes

0.6X0.6M opening

6 holes

0.4X0.4M openining

6 holes

Scale 1:20 Dimensions in m +/- 1mm. All holes are M8 tapped.

Issue	Remarks	Date	Name
1	Original	11/11/09	MCR

BRITISH ANTARCTIC SURVEY

Halley VI Project

TITLE

Vertical port detail

Sheet 1 of 4

Drawing Number:
Vertical_port_detail

DO NOT SCALE

Plan view of silicone gasket seal

DO NOT SCALE

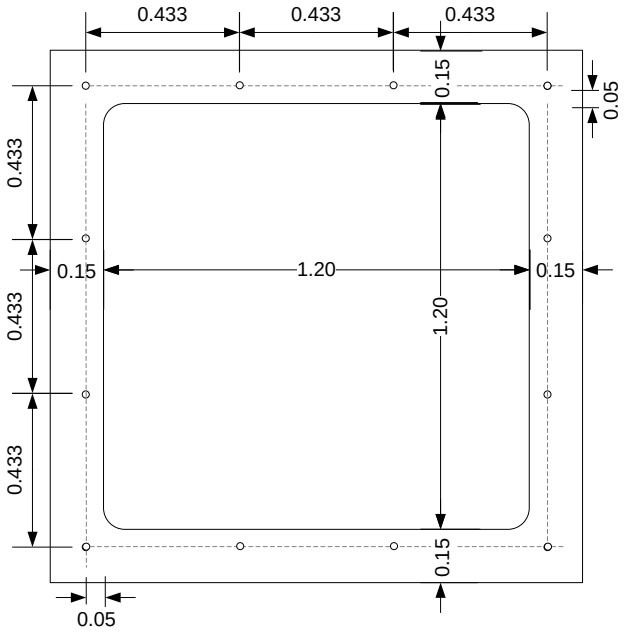

1.2x1.2M opening

12 holes

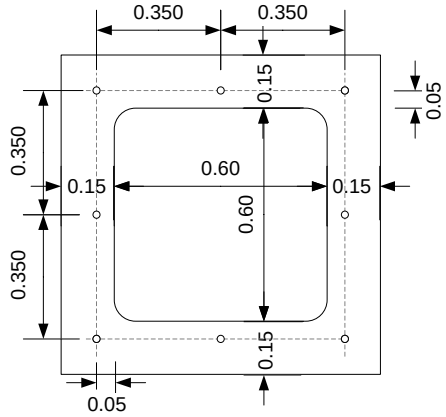

0.6X0.6M opening

6 holes

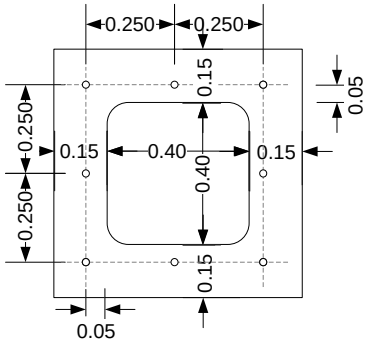

0.4X0.4M openining

6 holes

Scale 1:20 Dimensions in m +/- 1mm. All holes are 12mm plain. Material 2mm silicone rubber. Rounded internal corners.

One seal per hole + one spare seal of each size

Issue	Remarks	Date	Name
1	Original	11/11/09	MCR

BRITISH ANTARCTIC SURVEY

Halley VI Project

TITLE

Vertical port detail

Sheet 2 of 4

Drawing Number:
Vertical_port_detail

DO NOT SCALE

DO NOT SCALE

Plan view of outside of hatch covers. Material 2mm stainless steel sheet.

One insulated cover per hole + 1 spare metal plate of each size.

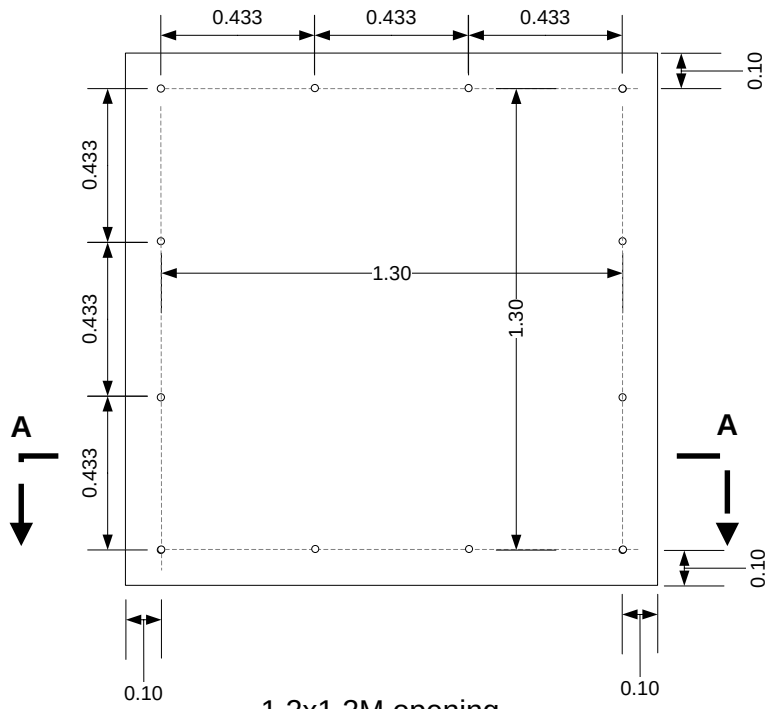

1.2x1.2M opening
12 holes

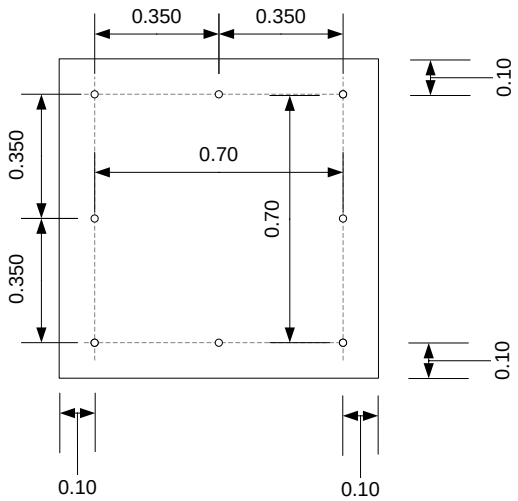

0.6X0.6M opening
6 holes

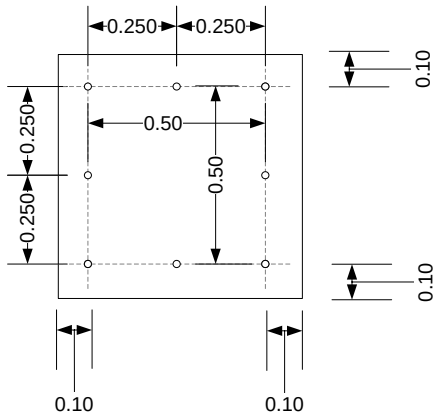

0.4X0.4M openining
6 holes

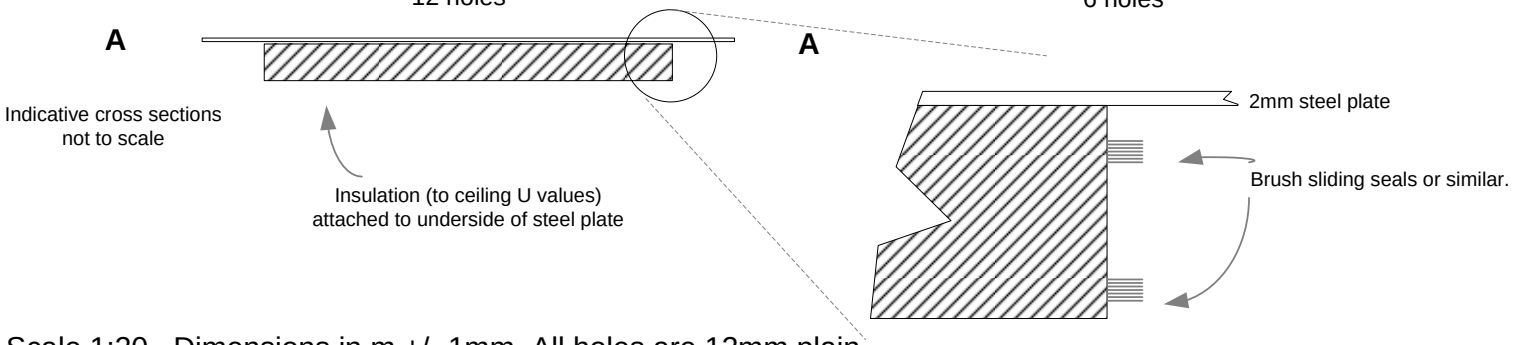

Scale 1:20 Dimensions in m +/- 1mm. All holes are 12mm plain

Issue	Remarks	Date	Name
1	Original	11/11/09	MCR

BRITISH ANTARCTIC SURVEY

Halley VI Project

TITLE

Vertical port detail

Sheet 3 of 4

Drawing Number:
Vertical_port_detail

DO NOT SCALE

DO NOT SCALE

Exploded view

Exploded view

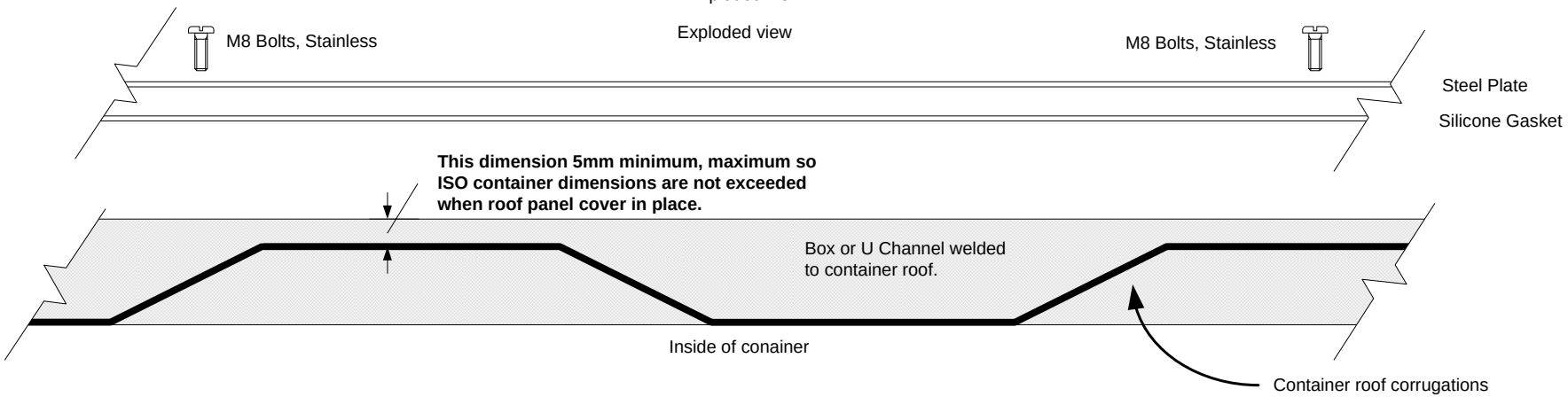

Constructed view

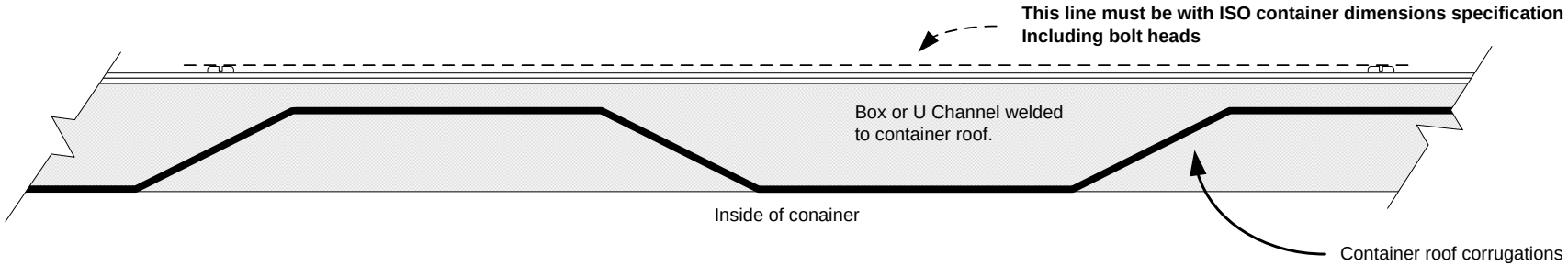

Scale approx 1:5. Profile of view port with container roof

Issue	Remarks	Date	Name
1	Original	11/11/09	MCR

BRITISH ANTARCTIC SURVEY

Halley VI Project

TITLE

Vertical port detail

Sheet 4 of 4

Drawing Number: Vertical_port_detail