DRG. N° A1 | 289-10835 | SHEET 1 OF 1

DRG. PRACTICE TO B.S. 308. THIRD ANGLE PROJECTION

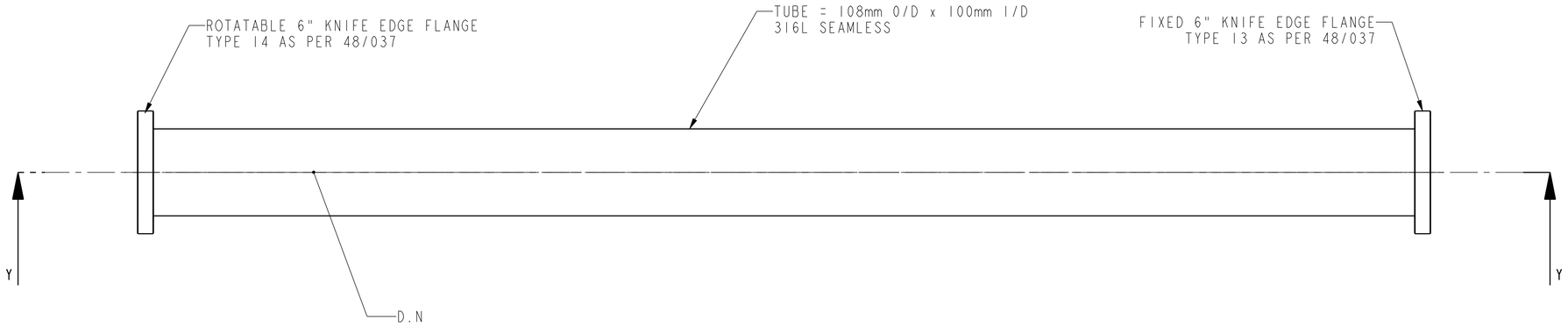

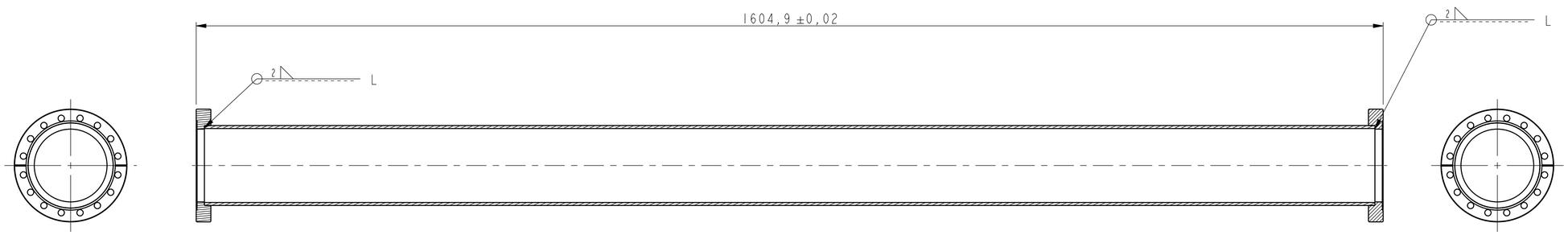

SECTION Y-Y

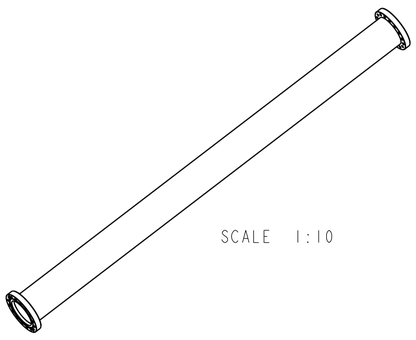

SCALE 1:10

NOTES

1. REMOVE ALL BURRS & SHARP EDGES.
2. GENERAL SURFACE FINISH 1.6 UNLESS OTHERWISE STATED.
3. ALL SCREW THREADS TO BS 3643 ISO METRIC COARSE SERIES, MEDIUM FIT UNLESS OTHERWISE STATED.
4. DRG No TO BE INCRIBED ON ITEM WHERE INDICATED THUS: DN.
5. ALL VACUUM SURFACES TO BE FREE FROM VISIBLE DEFECTS SUCH AS PITTING, CRACKS AND INDENTIONS.
6. ITEM TO BE MANUFACTURED TO SPEC ASTEC-VAC-QCD-spc-002.
7. ITEM TO BE CLEANED IN ACCORDANCE WITH SPEC ASTEC-VAC-QCD-spc-003.
8. WELDING SYMBOLS TO BS. 499 PT 2.
9. ALL WELDING SYMBOLS WITH 'L' INDICATE THAT A VACUUM SEALING WELD IS REQUIRED.
10. WELDING SPEC BS EN 1011-1-2
11. MATERIAL - STAINLESS STEEL WITH MAGNETIC PERMABILITY OF LESS THAN 1,005
    PLATE - 316L
    BAR - 316L
    FLANGES - 316LN
12. VACUUM VESSEL TO BE TESTED TO A LEAK RATE BETTER THAN 10e-9 TORR LITRES/SEC IN ACCORDANCE WITH SPEC ASTEC-VAC-QCD-spc-004

RELEASE STATUS	Approved
WELDING SPEC	--------
MATERIAL SPEC	--------
MATERIAL	--------

TOLERANCES UNLESS OTHERWISE STATED
LINEAR DIMENSIONS UP TO 200 ± - ;OVER - ± -
ANGULAR DIMENSIONS ± -
SCALE 3:10 0 100
ALL DIMENSIONS IN mm's UNLESS OTHERWISE STATED

DRN.	PMA	SCIENCE AND TECHNOLOGY FACILITIES COUNCIL
DATE.	08/02/17	DARESBURY LABORATORY CHESHIRE
CKD.	PMA	TITLE ESS BEAM TRANSPORT
DATE.	07/11/16	BEAM PIPE 1 - PIPE FLANGE ASSY WITH NO PORTS
APPD.	PMA	
DATE.	07/11/16	

DRAWING N° A1 | 289-10835 | SHEET 1 OF 1 | ISSUE B

PRO/E CAD PART N° 289-10835

USED ON 256-10023

CONTRACTORS COMPANY --------

CONTRACTORS DRG N° .

A	FIRST ISSUE		
B	DRN.	PMA	ADDED ROTATABLE FLANGE. B1
	DATE	20/03/18	
	CHKD	PMA	
	APPD	PMA	

THIS DRAWING IS THE PROPERTY OF STFC AND MAY NOT BE COPIED OR USED FOR ANY PURPOSE OTHER THAN THAT FOR WHICH IT IS SUPPLIED WITHOUT THE EXPRESS WRITTEN AUTHORITY OF STFC.

ORIGINAL FRAME SIZE 804mm X 557mm