DRG. N° A0 | SHEET 1 OF 2 | 289-10725

DRG. PRACTICE TO B.S. 308. THIRD ANGLE PROJECTION

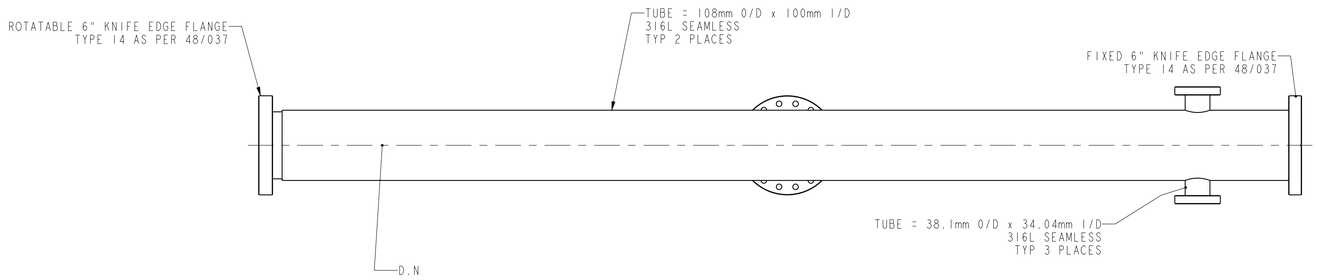

NOTES

1. REMOVE ALL BURRS & SHARP EDGES.
2. GENERAL SURFACE FINISH 1.6 UNLESS OTHERWISE STATED.
3. ALL SCREW THREADS TO BS 3643 ISO METRIC COARSE SERIES, MEDIUM FIT UNLESS OTHERWISE STATED.
4. DRG No TO BE INCRIBED ON ITEM WHERE INDICATED THUS: DN.
5. ALL VACUUM SURFACES TO BE FREE FROM VISIBLE DEFECTS SUCH AS PITTING, CRACKS AND INDENTIONS.
6. ITEM TO BE MANUFACTURED TO SPEC ASTEC-VAC-QCD-spc-002.
7. ITEM TO BE CLEANED IN ACCORDANCE WITH SPEC ASTEC-VAC-QCD-spc-003.
8. WELDING SYMBOLS TO BS. 499 PT 2.
9. ALL WELDING SYMBOLS WITH 'L' INDICATE THAT A VACUUM SEALING WELD IS REQUIRED.
10. WELDING SPEC BS EN 1011-1-2
11. MATERIAL - STAINLESS STEEL WITH MAGNETIC PERMABILITY OF LESS THAN 1,005
    PLATE - 316L
    BAR - 316L
    FLANGES - 316LN
12. VACUUM VESSEL TO BE TESTED TO A LEAK RATE BETTER THAN 10e-9 TORR LITRES/SEC IN ACCORDANCE WITH SPEC ASTEC-VAC-QCD-spc-004

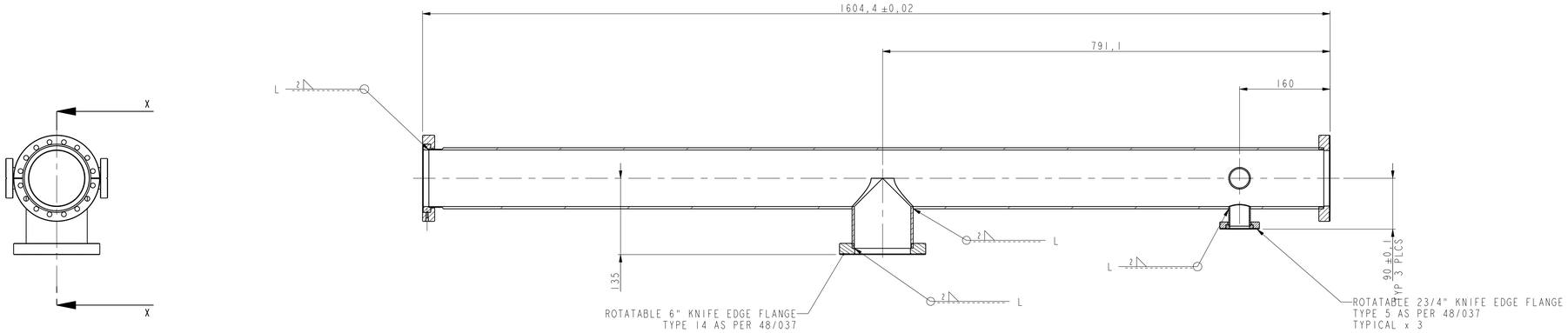

SECTION X-X

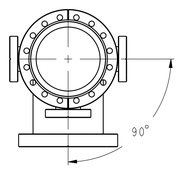

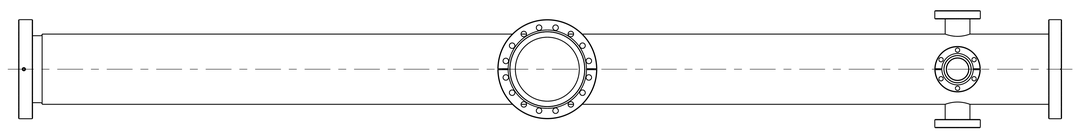

RELEASE STATUS	Approved
WELDING SPEC	--------
MATERIAL SPEC	--------
MATERIAL	--------

TOLERANCES UNLESS OTHERWISE STATED
LINEAR DIMENSIONS UP TO 200 ± 0.25; OVER - ± -
ANGULAR DIMENSIONS ± -
SCALE 3:10 0 200
ALL DIMENSIONS IN mm's UNLESS OTHERWISE STATED

DRN.	PMA	SCIENCE AND TECHNOLOGY FACILITIES COUNCIL
DATE.	07/11/16	DARESBURY LABORATORY CHESHIRE
CKD.	PMA	TITLE
DATE.	07/11/16	ESS BEAM TRANSPORT BEAM PIPE 2 PORT FAB
APPD.	PMA	
DATE.	07/11/16	

DRAWING N° A0 289-10725 SHEET 1 OF 2 ISSUE A
PRO/E CAD PART N° 289-10725

USED ON
CONTRACTORS COMPANY --------
CONTRACTORS DRG N°

A	FIRST ISSUE

THIS DRAWING IS THE PROPERTY OF STFC AND MAY NOT BE COPIED OR USED FOR ANY PURPOSE OTHER THAN THAT FOR WHICH IT IS SUPPLIED WITHOUT THE EXPRESS WRITTEN AUTHORITY OF STFC.

ORIGINAL FRAME SIZE 1139mm X 791mm