ASTEC-VAC-QCD-spc-006

Accelerator Science and Technology Centre

CCLRC Daresbury Laboratory

Vacuum Science Group

Vacuum Systems

Acceptance tests for the cleanliness of mechanical vacuum pumps for ASTeC-.

R J Reid

CCLRC Daresbury Laboratory
Warrington WA4 4AD

© CCLRC Daresbury Laboratory, 2003

Documentation Control

This Document

Date	Issue	Originator	Change Record	Approved
October, 2003	1.0	R J Reid	First issue	

Other Documents in this series to which this document refers

Document Ref	**Used**	**Current Version**									
ASTEC-VAC-QCD-spc-001	Yes /~~No~~	1.0									
ASTEC-VAC-QCD-spc-002	~~Yes~~ /No	1.0									
ASTEC-VAC-QCD-spc-003	~~Yes~~ /No	1.0									
ASTEC-VAC-QCD-spc-004	Yes /~~No~~	1.0									
ASTEC-VAC-QCD-spc-005	Yes /~~No~~	1.0									
ASTEC-VAC-QCD-spc-006	This Doc	1.0									
ASTEC-VAC-QCD-spc-007	Yes /~~No~~	1.0									
ASTEC-VAC-QCD-spc-008	Yes /~~No~~	1.0									
ASTEC-VAC-QCD-proc-001	~~Yes~~ /No	1.0									
ASTEC-VAC-QCD-proc-002	~~Yes~~ /No	1.0									
ASTEC-VAC-QCD-proc-003	~~Yes~~ /No	1.0									

CONTENTS

1. Introduction 1
   1.1 Definitions 1
   1.2 Scope 1
   1.3 Cleanliness 1
   1.4 Pump Ultimate 1
   1.5 Gas Scans 1
2. Backstreaming 1
3. Procedure for Pumps with Ultimates > 10^{-6} mbar. 2
   3.1 Equipment 2
   3.2 Preliminary procedures 2
   3.3 Procedure for Measuring Backstreaming 3
4. Procedures for Pumps with Ultimates < 10^{-6} mbar 4
   4.1 Equipment 4
   4.2 Types of backstreaming 5
   4.3 Preliminary Procedures 6
   4.4 Procedures for measuring dynamic backstreaming 6
5. Reporting of Results 9

Appendix 1 10
   Sizing the Conductance for the Apparatus to measure Static Backstreaming 10

1. Introduction

1.1 Definitions

Reference should be made to ASTEC-VAC-QCD-spc-001 *Definitions relevant to Quality Control Documentation* for the definitions of various terms used in this document.

1.2 Scope

This document describes methods for estimating the backstreaming of contaminant species from mechanical vacuum pumps which would normally be considered to be “clean” or “dry”. Oil lubricated and sealed pumps are outside the scope of these procedures. The importance of knowing something about such backstreaming is that it can compromise vacuum system cleanliness.

1.3 Cleanliness

Cleanliness of the vacuum systems associated with the machine complex of ASTeC- is of the utmost importance. Even when a vacuum system operates at relatively modest vacuum levels, then the systems should remain clean.

Definitions of cleanliness are to be found in ASTEC-VAC-QCD-spc-005 *Acceptance Tests for Vacuum Vessels, Components and Assemblies.*

1.4 Pump Ultimate

In this document, “pump ultimate” shall be taken to mean the *higher* of the two pressures:

1.4.1 The ultimate pressure nominally achievable by the pump or pump set as specified by the manufacturer.

1.4.2 That pressure achieved by the pump or pump set after a period of pumping a vacuum volume such that the pressure in that vacuum volume as indicated on the vacuum gauges installed in that vacuum volume shall have been constant to within ±3% for a period of not less than 1 hour.

1.5 Gas Scans

1.5.1 Gas scans are residual gas spectra recorded using a mass spectrometer.

1.5.2 For the purposes of this specification, a gas scan shall be defined as

1.5.2.1 A spectrum recorded over the mass range 1 – 200 amu.

1.5.2.2 If the instrument used operates in linear mode for partial pressure, then this scan shall be repeated for each decade of sensitivity available, from that showing the major species present as an “on scale” peak through to the maximum sensitivity of the instrument.

1.5.2.3 If the instrument operates in logarithmic mode for partial pressure, then the dynamic range shall be chosen to encompass a similar range of partial pressures.

1.5.3 Gas scans may be recorded either digitally or on paper.

1.5.4 All relevant instrument settings shall be recorded at the time a gas scan is taken and retained with the data.

2. Backstreaming

In a pre-cleaned and processed vacuum system, one of the most likely sources of contamination is backstreaming from mechanical pumps. This procedure determines how such backstreaming shall be assessed for pumps with ultimates between about 100 mbar and 10^{-9} mbar.

It should be noted that this procedure is only applicable to the measurement of backstreaming from “clean” or “dry” pumps, i.e. those for which there is no working fluid. In such cases, backstreaming is most likely to derive from evaporation of bearing lubricants, although outgassing from constructional materials or from solid or elastomeric seals may also contribute.

3. Procedure for Pumps with Ultimates > 10^{-6} mbar.

3.1 Equipment

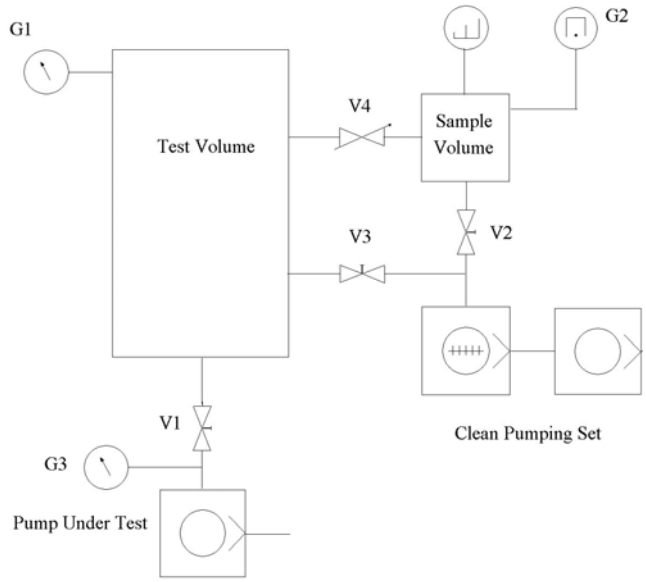

Figure 1 Test set up for measuring backstreaming from a pump with an ultimate > 10^{-6} mbar

The equipment to be used is shown in Figure 1. All equipment, with the possible exception of the pump sets, shall be "clean" and capable of being baked to 250°C. The test volume shall be of such a size that it is capable of being evacuated to the ultimate of the pump under test by that pump in a reasonable time. The sample volume shall be smaller than the test volume, but the ratio of these two volumes is not critical. Gauges G1 and G3 shall be chosen to give a sensible indication of the ultimate expected of the pump being tested. G2 is shown as a cold cathode gauge, but may be a hot cathode device.

The clean pumping set shall normally comprise a clean turbomolecular pump with a dry backing pump. The backstreaming characteristics of this pump set shall have been determined in a previous test and shall normally be less than that to be expected from the pump under test. Suitable gauges (not shown) shall be used to monitor the performance of this pump set. The speed of this pump set shall be such that it is capable of evacuating the test volume to a pressure < 10^{-6} mbar in a reasonable time and the sample volume to a pressure of <10^{-8} mbar also in a reasonable time. (Note that this procedure does not define "reasonable" in this context. It will largely be a matter of convenience for the conductor of these tests.) The bore of the valves V1, V2 and V3 and the connecting pipework shall be chosen to be compatible with the pumping speeds of the respective pumps.

Also fitted (but not shown) are valves which may be used to admit dry nitrogen to each part of the apparatus.

The residual gas analyser shall have a mass range of 1-200 amu and a minimum detectable partial pressure of 10^{-11} mbar for N_2.

3.2 Preliminary procedures

3.2.1 With all valves closed, the clean pump set shall evacuate up to valves V2 and V3 for a minimum period of 24 hours. Suitable gauges shall be used to ensure that this pump set is operating correctly.

3.2.2 Valves V2, V3 and V4 shall be opened and the sample and test volumes evacuated. (If desired, a secondary clean roughing pump may be used to assist this purpose, provided that it can be isolated from the system at the end of this roughing stage and play no other role in the procedure.)

3.2.3 During the stage 3.2.2, all parts of the vacuum system which are being evacuated shall be proved to be leak tight to better than 10^{-9} mbar l sec^{-1}, using the appropriate technique as

described in ASTEC-VAC-QCD-spc-004 *Leak Testing of Vacuum Vessels and Assemblies.*

3.2.4 The pump under test shall be started and evacuate up to valve V1. This part of the apparatus shall be proved to be leak tight to better than 10^{-9} mbar l sec^{-1}, using the appropriate technique as described in ASTEC-VAC-QCD-spc-004 *Leak Testing of Vacuum Vessels and Assemblies.*

3.2.5 The pump under test shall be stopped and vented to atmospheric pressure with clean dry nitrogen through a vent valve (not shown) installed between valve V1 and the pump inlet flange.

3.2.6 When the pressure indicated on gauge G2 is less than 10^{-6} mbar, valves V3 and V4 shall be closed. The clean pumping set shall continue evacuating the sample volume through valve V2.

3.2.7 The test volume shall be left valved off under vacuum.

3.2.8 When the pressure indicated on gauge G2 is less than 10^{-8} mbar, the residual gas analyser shall be switched on and thoroughly degassed in accordance with the manufacturer's procedures. (If G2 is a hot cathode gauge, then it shall be thoroughly degassed prior to this operation.)

3.2.9 When the analyser and, if appropriate, gauge G2 have cooled to ambient temperature, a residual gas scan as defined in 1.5 above shall be recorded over the mass range 1 – 200 amu.

3.2.10 Before proceeding further, this residual gas scan must indicate that the system shall conform to the definition of cleanliness for systems for high vacuum use to be found in Appendix 2 of the specification ASTEC-VAC-QCD-spc-005 *Acceptance Tests for Vacuum Vessels, Components and Assemblies*. If it should fail, then the entire apparatus shall be baked to 250°C for a minimum period of 24 hours into the clean pump set and this set of preliminary procedures repeated.

3.3 Procedure for Measuring Backstreaming.

3.3.1 Before starting this procedure, the Preliminary Procedures (Section 3.2 above) shall have been completed and the system cleanliness confirmed (3.2.10 above); the test volume shall have been evacuated to a pressure $< 10^{-6}$ mbar and the sample volume to its base pressure.

3.3.2 With valve V1 closed, the pump under test shall be run for a minimum period of 24 hours or until the specified ultimate of the pump as indicated on gauge G3 is reached, whichever shall be the longer time.

3.3.3 During this time, valve V2 shall be open and valve V3 shall be closed with the clean pumping set holding the sample volume at its base pressure with the residual gas analyser and gauge G2 operating.

3.3.4 If the pressure in the test volume as indicated on gauge G1 has increased to a value $> 10^{-6}$ mbar, valve V2 shall be closed and valve V3 opened until this pressure falls below 10^{-6} mbar. Valve V3 shall be closed and valve V2 opened

3.3.5 The pressure in the test volume shall be increased using clean, dry nitrogen gas introduced through a leak valve (not shown in the figure) until the pressure is two decades higher than that indicated by gauge G3, or at atmospheric pressure if the ultimate of the pump under test is higher than 10 mbar.

3.3.6 The dry nitrogen feed shall be closed off.

3.3.7 Valve V1 shall be opened fully and the pump under test shall evacuate the test volume for exactly 24 hours.

3.3.8 At a time such that it is anticipated steps 3.3.8 to 3.3.10 below shall have been completed shortly before the time period of 24 hours referred to in 3.3.7 above, valve V2 shall be closed and clean, dry nitrogen shall be bled into the sample volume through a leak valve (not shown) until the pressure is approx 10^{-6} mbar.

3.3.9 A set of gas scans similar to those taken in 3.2.9 above shall be recorded.

3.3.10 Valve V2 shall be opened and the test volume pumped to below 10^{-8} mbar.

3.3.11 Valves V1 and V2 shall be closed and the leak valve V4 adjusted until the pressure in the sample volume has risen to approx. 10^{-6} mbar. V4 shall then be closed.

3.3.12 A gas scan shall be recorded as previously (3.3.9 above)

3.3.13 Backstreaming for a given atomic mass number shall then be *defined* as the difference in measured peak height between the scans obtained in steps 3.3.12 and 3.3.9 above.

3.3.14 The significance of this backstreaming shall be determined according to the individual species present in the gas scans and the purpose for which the pump is to be used.

4. Procedures for Pumps with Ultimates < 10^{-6} mbar

4.1 Equipment

The equipment to be used is shown in Figure 2. All equipment shall be "clean", and, with the possible exception of the pump sets, be capable of being baked to 250°C. The header of the clean pump set between valve V3 and the top flange of the pump itself must also be capable of being baked to at least 150°C. The test volume shall be of such a size that it is capable of being evacuated to the ultimate of the pump under test by that pump in a reasonable time. It shall have a surface area such that the anticipated pressure rise due to thermal outgassing from its surfaces will be small compared to that expected from backstreaming from the pump (see 4.4.3.2 below).

Gauges G1 and G2 shall be chosen to give a sensible indication of the ultimate expected of the pump under test. They are shown as cold cathode gauges, but may be hot cathode devices.

The clean pumping set shall comprise a clean turbomolecular pump with a dry backing pump. The speed and ultimate of this pump set shall be such that it is capable of evacuating the test volume to a pressure < 10^{-9} mbar in a reasonable time. (As before, this procedure does not define "reasonable". It will largely be a matter of convenience for the conductor of these tests.) The backstreaming characteristics of this pump set shall have been demonstrated in a previous set of tests to be acceptable (i.e. to be less than the type of backstreaming to be expected of the pump under test). Suitable gauges (not shown) shall be used to monitor the performance of this pump set. The bore of the valves V1, V2 and V3 and the connecting pipework shall be chosen to be compatible with the pumping speeds of the respective pumps. In particular, V1 shall have a bore compatible with the diameter of the throat of the pump under test.

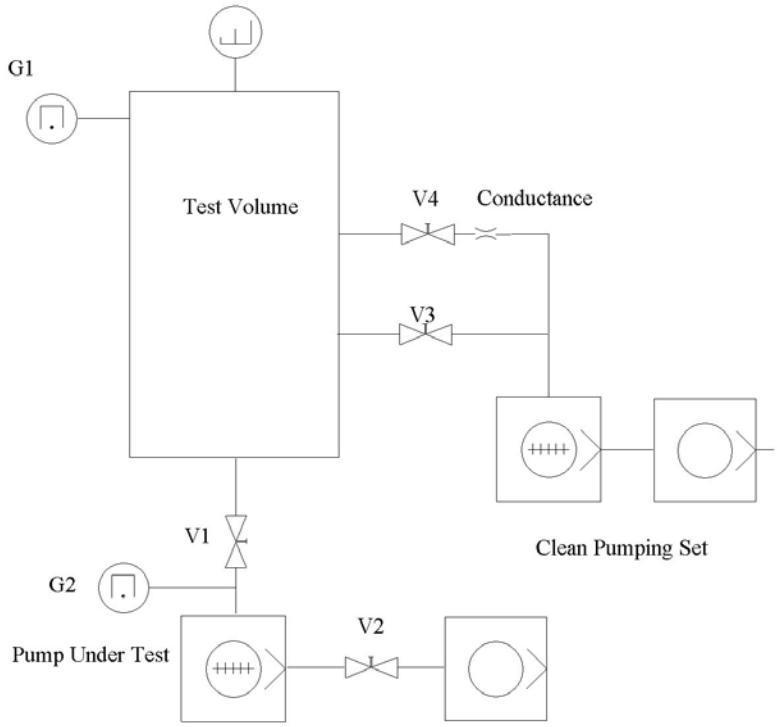

Figure 2 Test set up for measuring backstreaming from pumps with ultimates < 10^{-6} mbar. (See the text for discussion of the position of valve V2)

Valve V2 must be operable independently of the status of the pump set. If the pump set is an integrated unit discharging directly to atmosphere and there is no independently controllable valve between the high vacuum and forevacuum stages, then valve V2 shall isolate the discharge port of the pump set from atmosphere.

The size of the conductance shown shall be chosen as discussed in Section 4.4.3 below.

Also fitted (but not shown) are valves which may be used to admit dry nitrogen to each part of the apparatus.

The residual gas analyser shall have a mass range of 1-200 amu and a minimum detectable partial pressure of 10^{-13} mbar for N_2.

4.2 Types of backstreaming

In this part of this set of procedures, two forms of backstreaming shall be measured. The first is true backstreaming when the pump is operating. Here, this is referred to as *dynamic backstreaming*. In these procedures, this shall be measured (where applicable) for the high vacuum and fore vacuum pumps as a unit and separately for the high vacuum pump only. Note that if there is significant backstreaming from the forevacuum pump through the high vacuum pump, then in these tests as described, some contamination of the high vacuum stages may take place and it may not be possible to separate out the contribution of the high vacuum pump to the dynamic backstreaming of the pump set (or indeed to the static backstreaming discussed below). If in doubt, the backstreaming of the forevacuum pump may be measured separately using the techniques of Section 3 above and subtracted from these measurements to give an indication of the results for the high vacuum pump itself.

The second type of backstreaming is rather a measure of the outgassing of the pump and its components, including greases in the bearings, etc., and is referred to here as *static backstreaming*.

The former type of outgassing is a measure of the anticipated contamination of a work chamber being evacuated by such a pump set; the latter a measure of possible contamination of a pump header when the pump is switched off, but valved off from the work chamber. Such contamination can then propagate into the work chamber when the valve is next opened. It may be argued that in such a situation, the pump would be vented and therefore such outgassing would not take place. This is indeed good practice. What is being determined here is a worst-case situation.

4.3 Preliminary Procedures

4.3.1 Before commencing, all parts of the apparatus, especially the test volume, must be proved to be leak tight to better than 10^{-10} mbar l sec^{-1} using the appropriate technique as described in ASTEC-VAC-QCD-spc-004 *Leak Testing of Vacuum Vessels and Assemblies.*

4.3.2 With all valves closed, the clean pump set shall evacuate up to valve V3 and the pump being tested shall evacuate the volume up to valve V1 for a minimum period of 24 hours. Suitable gauges shall be used to ensure that the clean pump set is operating correctly and is clean.

4.3.3 Valves V3 and V4 shall be opened and the test volume evacuated. (If desired, a secondary clean roughing pump may be used to assist this purpose, provided that it can be isolated from the system at the end of this roughing stage and play no other role in the procedure.) During the stage 3.2.2, all parts of the vacuum system which are being evacuated shall be proved to be leak tight to better than 10^{-9} mbar l sec^{-1}, using the appropriate technique as described in ASTEC-VAC-QCD-spc-004 *Leak Testing of Vacuum Vessels and Assemblies*.

4.3.4 The pump under test shall be started and evacuate up to valve V1. This part of the apparatus shall be proved to be leak tight to better than 10^{-9} mbar l sec^{-1}, using the appropriate technique as described in ASTEC-VAC-QCD-spc-004 *Leak Testing of Vacuum Vessels and Assemblies.*

4.3.5 The pump under test shall be stopped and vented to atmospheric pressure with clean dry nitrogen through a vent valve (not shown) installed between valve V1 and the pump inlet flange.

4.3.6 Once a suitable pressure is established in the test volume, this volume shall be baked to a temperature of 250°C (with V3 and V4 open and V1 closed) for a minimum period of 24 hours and the header of the clean pump set baked to as high a temperature as permitted by the pump manufacturer. Where the manufacturer of the pump under test so permits, then the pump header up to valve V1 shall also be baked to the maximum permissible temperature.

4.3.7 As the test volume cools, when the pressure indicated on gauge G1 is less than 10^{-7} mbar, then the residual gas analyser shall be switched on and thoroughly degassed in accordance with the manufacturer's procedures. (If G1 and/or G2 are hot cathode devices, then they shall be thoroughly degassed prior to this operation.)

4.3.8 When the analyser and, if appropriate, gauges G1 and G2 have cooled to ambient temperature and the pressure in the test volume has reached its base value, a set of gas scans gas scan shall be recorded as in 1.5 above.

4.3.9 Before proceeding further, this gas scan must indicate that the system shall conform to the definition of cleanliness for systems for high vacuum use as defined in Appendix 2 of the specification ASTEC-VAC-QCD-spc-005 *Acceptance Tests for Vacuum Vessels, Components and Assemblies*. If it should fail, then steps 4.3.6 to 4.3.7 above shall be repeated.

4.3.10 Valves V3 and V4 shall be closed and clean dry nitrogen shall be admitted via a leak valve (not shown) to the test volume until a pressure three decades above the specified ultimate of the pump under test is reached. The leak valve shall be closed, valve V3 opened and the pressure allowed to fall to the base value.

4.3.11 A gas scan or set of gas scans as in 1.5 above shall be recorded and there shall be no significant increase in contamination species between the two sets of scans. If this is not the case, then the source of clean dry nitrogen shall be rectified.

4.4 Procedures for measuring dynamic backstreaming

4.4.1 Dynamic backstreaming from a pump set

4.4.1.1 Prior to carrying out this test, the preliminary procedures described in Section 4.3 above shall have been carried out.

4.4.1.2 Valve V1 and V4 shall be closed, valve V2 and valve V3 shall be open.

4.4.1.3 The pump under test shall be stopped and vented with clean dry nitrogen through a vent valve (not shown) installed between valve V1 and the pump inlet flange. Valve V2 shall be open and remain open until this procedure is completed.

4.4.1.4 The pump under test shall then be switched on and shall pump the volume up to valve V1 for a minimum period of 24 hours or until the pump set has reached its ultimate as indicated on gauge G2, whichever is the longer. (Note that this can take place simultaneously with steps 4.3.7 to 4.3.11 of the preliminary procedures above if desired.)

4.4.1.5 Once the pump under test has reached its ultimate, then a gas scan or set of gas scans as in 1.5 above shall be recorded for the test volume.

4.4.1.6 Valve V3 shall be closed.

4.4.1.7 Clean dry nitrogen shall be admitted to the test volume until the pressure is three decades above the pressure indicated on gauge G2.

4.4.1.8 Valve V1 shall be opened and the pump under test shall evacuate the Test Volume for a minimum period of 24 hours or until the pump under test has reached its ultimate, whichever is the longer.

4.4.1.9 A gas scan or set of gas scans shall be recorded as before.

4.4.1.10 Backstreaming for a given atomic mass number shall then be *defined* as the difference in measured peak height between the scans obtained in steps 4.4.1.5 and 4.4.1.9 above.

4.4.1.11 The significance of this backstreaming shall be determined according to the individual species present in the gas scans and the purpose for which the pump is to be used.

4.4.2 Dynamic backstreaming from the high vacuum pump of a pump set

4.4.2.1 This measurement is only possible where the high vacuum pump and forevacuum pump of a pump set are separate entities with valve V2 installed between them and operated independently of the pump set. A ballast volume must be present (or introduced) between the two pumps of sufficient size that the high vacuum pump can run for the duration of stage 4.4.2.11 below of this test with the forevacuum (backing) pump valved off without the pressure in the ballast volume reaching the critical backing pressure of the high vacuum pump.

4.4.2.2 These procedures do not take into consideration any effects of mass dependent compression ratio of the pump under test. For turbine-based pumps in particular, the tests may not give an accurate result for light species such as hydrogen. In practice it is usually the case that it is the backstreaming of higher mass number components (such as grease or oil constituents) which is of interest, so these procedures will normally give meaningful information.

4.4.2.3 Prior to carrying out this test, the preliminary procedures described in Section 4.3 above shall have been carried out.

4.4.2.4 Valves V1 and V4 shall be closed, valves V2 and V3 shall be open.

4.4.2.5 The pump under test shall be stopped and vented to atmospheric pressure with clean dry nitrogen through a vent valve (not shown) installed between valve V1 and the pump inlet flange.

4.4.2.6 The nitrogen vent valve shall be closed. The pump under test shall then be switched on and shall pump the volume up to valve V1 for a minimum period of 24 hours or until the pump set has reached its ultimate as indicated on gauge G2, whichever is the longer. (Note that this can take place simultaneously with steps 4.3.7 to 4.3.11 of the preliminary procedures if desired.)

4.4.2.7 Once the pump under test has reached its ultimate, then a gas scan as in 1.5 above shall be recorded for the test volume.

4.4.2.8 Valve V3 shall be closed.

4.4.2.9 Clean dry nitrogen shall be admitted to the test volume until the pressure is three decades above the pressure indicated on gauge G2.

4.4.2.10 Valve V1 shall be opened and the pump under test shall evacuate the Test Volume for a minimum period of 24 hours or until the pump under test has reached its ultimate, whichever is the longer.

4.4.2.11 Valve V2 shall be closed and the high vacuum pump left running with valve V1 open for a further period of 24 hours. During this stage, the pressure indicated on gauges G1 and G2 must be monitored to ensure that they remain within safe operating limits for the pump.

4.4.2.12 A gas scan shall be recorded as previously.

4.4.2.13 Backstreaming for a given atomic mass number shall then be *defined* as the difference in measured peak height between the scans obtained in steps 4.4.2.7 and 4.4.2.12 above.

4.4.2.14 The significance of this backstreaming shall be determined according to the individual species present in the gas scans and the purpose for which the pump is to be used.

4.4.3 Static outgassing from a high vacuum pump

4.4.3.1 Static outgassing shall only be measured for a high vacuum pump or for an integrated pump discharging direct to atmosphere.

4.4.3.2 It is assumed that the outgassing from the walls of the test volume can be ignored relative to the outgassing of the pump.

4.4.3.3 Even with a well-outgassed test volume, the pressure rise due to thermal outgassing when the pumps are valved off is not insignificant and makes the measurement of the backstreaming from the pump difficult. Therefore a small conductance (as shown in Figure 2) is introduced between the test volume and the clean pump set. This conductance can be valved off by means of V4. Appendix 1 gives an indication of how this conductance might be sized and achieved.

4.4.3.4 Prior to carrying out this test, the preliminary procedures described in Section 4.3 above shall have been carried out.

4.4.3.5 Valves V1 and V4 shall be closed and valves V2 and V3 shall be open.

4.4.3.6 The pump under test shall be stopped and vented with clean dry nitrogen through a vent valve (not shown) installed between valve V1 and the pump inlet flange.

4.4.3.7 The nitrogen vent valve shall be closed. The pump under test shall then be switched on and shall pump the volume up to valve V1 for a minimum period of 24 hours or until the pump set has reached its ultimate as indicated on gauge G2, whichever is the longer. (Note that this can take place simultaneously with steps 4.3.7 to 4.3.11 of the preliminary procedures if desired.)

4.4.3.8 This step may take place while the pump under test is reaching its ultimate as in the previous step, and once the preliminary procedures are completed. It should start about 12 hours before the end of the previous step. Valve V3 shall be closed, valve V4 shall be opened and the pressure in the test volume allowed to stabilise for a period of 12 hours. (If the pressure in the test volume rises above 10^{-5} mbar during this stage, then the test should be aborted and the test chamber rebaked to reduce its outgassing.)

4.4.3.9 A gas scan as in 1.5 above shall be recorded for the test volume.

4.4.3.10 Valve V1 shall be opened and valve V2 closed. The pump under test shall be switched off.

4.4.3.11 If the pressure in the test volume rises above 10^{-5} mbar during the next step, then the test should be aborted and a larger value of the conductance fitted.

4.4.3.12 After a period of 12 hours, a gas scan shall be recorded as before.

4.4.3.13 Backstreaming for a given atomic mass number shall then be *defined* as the difference in measured peak height between the scans obtained in steps 4.4.3.9 and 4.4.3.11 above

4.4.3.14 The significance of this backstreaming shall be determined according to the individual species present in the gas scans and the purpose for which the pump is to be used.

5. Reporting of Results

Results shall be presented in a report which shall include full details of the pump under test, copies of all gas scans and tables of all measured backstreaming components for each test carried out. Details of the total pressures measured at each stage of the procedures, times at which results were taken, operations such as baking which have been carried out shall be reported in sufficient detail to permit an accurate assessment of the validity of the test to be made.

Appendix 1

Sizing the Conductance for the Apparatus to measure Static Backstreaming.

We can assume for a well-baked stainless steel system the average thermal outgassing rate at room temperature is about 1 x 10^{-12} mbar l sec^{-1}. We assume that we can reach a base pressure of 10^{-10} mbar in the test volume.

If the test volume is a cylinder of about 20 cm diameter and 50 cm high, then the surface area is about 3.8 x 10^3 cm^2 and the volume is about 15.7 litres. We can add about 500 cm^2 and a volume of about 2 litres for appendages, etc.

If we valve such a volume off and wish to restrict the pressure rise from the base pressure to a maximum pressure of 10^{-8} mbar in 5 minutes, requires an outgassing rate of about 1.2 x 10^{-13} mbar l sec^{-1}, which is not easy to obtain. For longer times a lower rate is of course required. For the above outgassing rate of 1 x 10^{-12} mbar l sec^{-1}, the pressure would rise to 7 x 10^{-8} mbar in 5 minutes.

If however, we introduce a small conductance of 1 l sec^{-1} as shown, then with the outgassing rate of 1 x 10^{-12} mbar l sec^{-1}, the pressure would rise to a steady value of about 4 x 10^{-9} mbar.

Thus it should be relatively easy to measure backstreaming rates from the pump of more than about 10^{-10} mbar l sec^{-1}.

A conductance of 1 l sec^{-1} could be an aperture (in a thin diaphragm) of diameter 3.3 mm or a tube of length 7 cm and internal diameter of 9 mm or 7 mm of 5 mm id tube.