S-5!™

Unprecedented Innovation
Unmatched Quality
Unbelievable Price

S-5-E Clamp

The S-5-E Clamp

The S-5-E clamp is designed specially for double-folded standing seam roof profiles having the appropriate dimensioning. This clamp is also the one recommended for Butler's MR24™.

Although a bit smaller and less expensive than the S-5-U, for these profiles, the S-5-E is just as strong.

The S-5-E is perfect for S-5!™ snow retention products and other heavy-duty applications.

Thanks to our patented round-point setscrews, S-5!™ clamps do not pierce metal roof paneling, thereby protecting roof coatings and weather-tightness warranties.

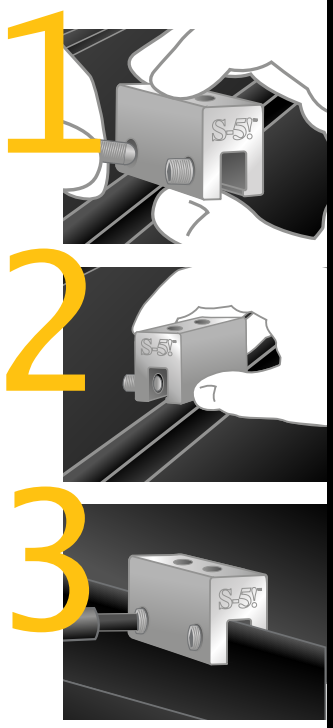

Installation is as simple as placing the clamp on the seam and tightening the patented round-point setscrews to the specified tension. Then, affix ancillary items using the bolt provided. Go to **www.S-5.com/tools** for information and tools available for properly attaching and tensioning S-5!™ clamps.

The S-5-E Mini

The S-5-E Mini is a medium-duty, non-penetrating seam clamp. (A bit shorter than the S-5-E and having one setscrew rather than two.) The Mini is the choice for attaching all kinds of rooftop accessories: signs, walkways, satellite dishes, antennas, rooftop lighting, lightning protection systems, solar arrays, exhaust stack bracing, conduit, condensate lines, mechanical equipment—just about anything!*

*S-5!™ Mini clamps can be used with RamGard™ unitized snow guards but are not compatible and should not be used with our SnoRail™/SnoFence™ or ColorGard® snow retention systems.

Attach almost anything to standing seam metal roofs without piercing the panel!

888-825-3432 **www.S-5.com**

S-5!™

Unprecedented Innovation
Unmatched Quality
Unbelievable Price

S-5-E Clamp

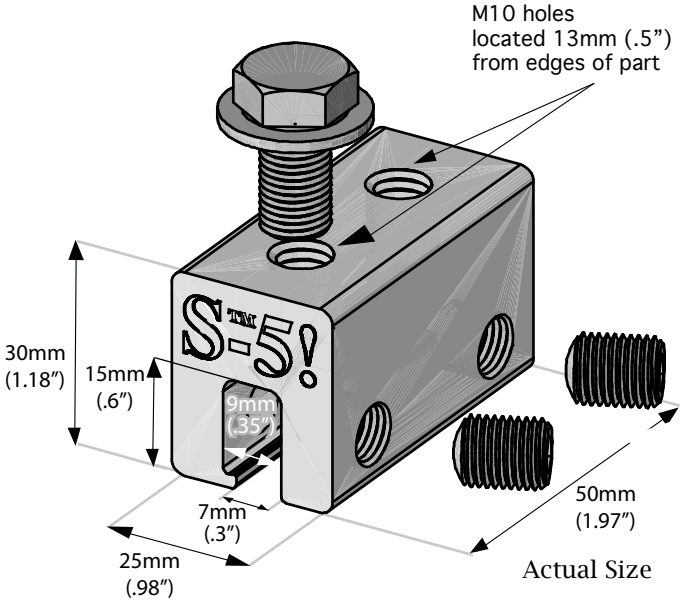

S-5-E Mini

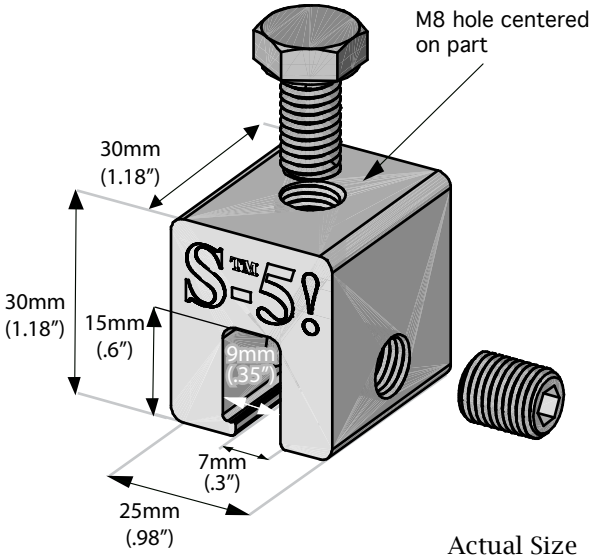

The S-5-E and S-5-E Mini clamps are each furnished with the hardware shown above. Each box also includes a bit tip for tightening setscrews using an electric screw gun. A structural aluminum attachment clamp, the S-5-E is compatible with most common metal roofing materials excluding copper. All included hardware is stainless steel. Please visit **www.S-5.com** for more information including CAD details, metallurgical compatibilities and specifications.

Example Profiles

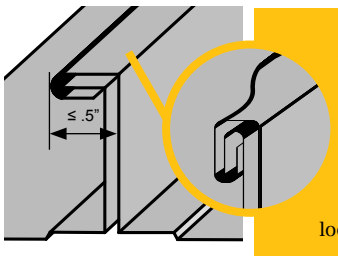

For horizontal seams under .5" crimp the seam to 180 degrees at desired clamp location.

This illustration demonstrates crimping technique, NOT actual location of clamp.

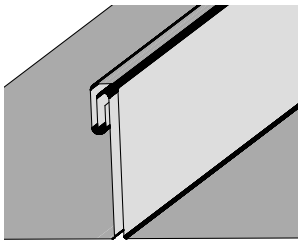

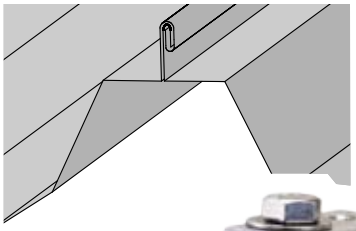

The S-5-E clamp has been tested for load-to-failure results on a variety of double-folded standing seam roofs, from leading manufacturers of panels and panel-forming machines. The independent lab test reports found on our website at **www.S-5.com** prove that S-5!™ holding strength is unmatched in the industry.

The strength of the S-5-E clamp is in its simple design. The patented setscrews will slightly dimple the metal seam material but will not puncture it.

S-5!™ Warning! Please use this product responsibly!

Products are protected by multiple U.S. and foreign patents. Visit the website at www.S-5.com for complete information on patents and trademarks. For maximum holding strength, setscrews should be tensioned and re-tensioned as the seam material compresses. Clamp setscrew tension should be verified using a calibrated torque wrench between 160 and 180 inch pounds when used on 22ga steel and between 130 and 150 inch pounds for all other metals and thinner gauges of steel. Consult the S-5!™ website at www.S-5.com for published data regarding holding strength.

Copyright 2008, Metal Roof Innovations, Ltd. S-5!™ products are patented by Metal Roof Innovations, Ltd.

version 080808

Distributed by