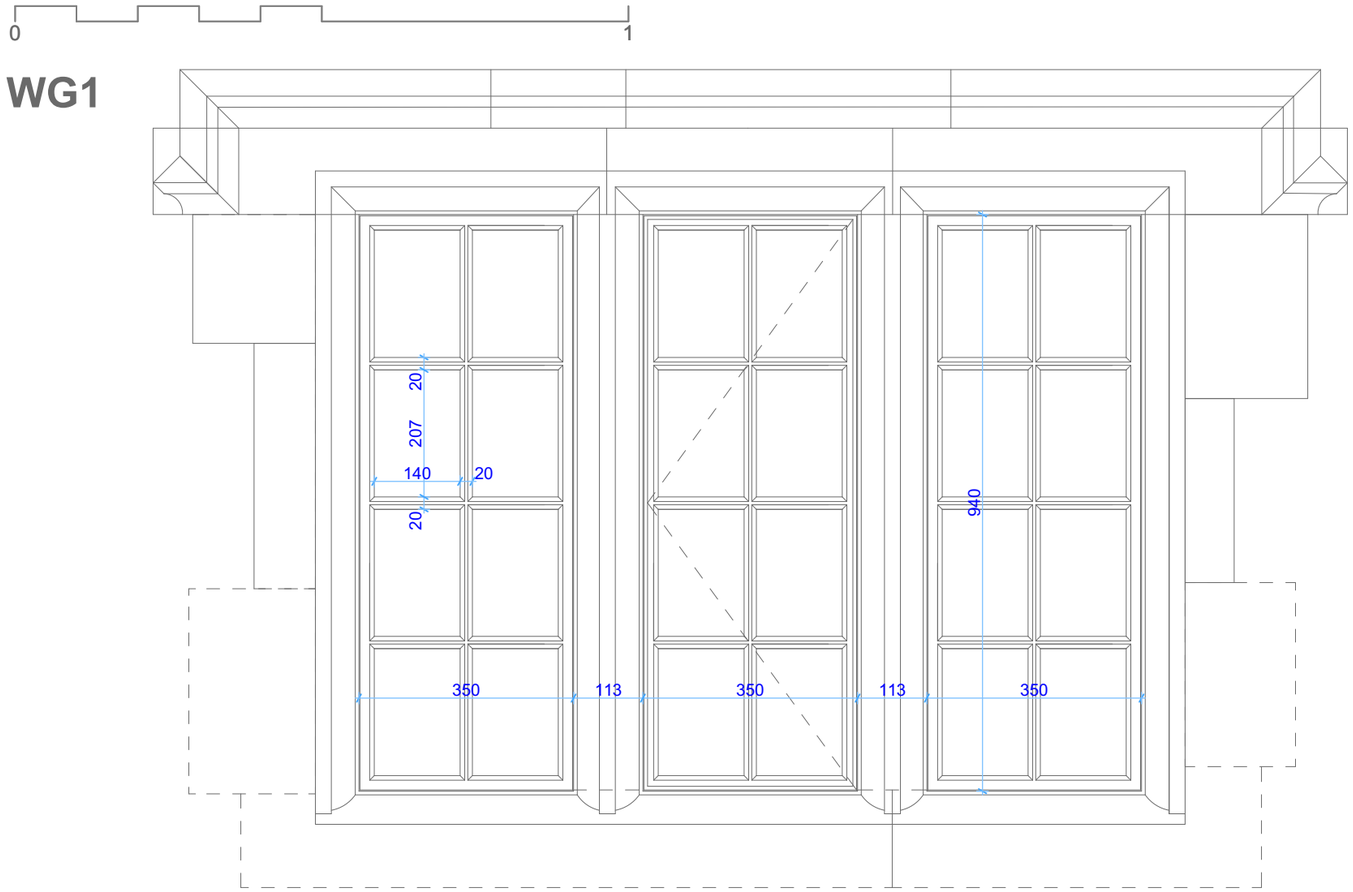

7.1 South Elevation

7.1.1 WG1 and WG2 Existing metal windows
Refer to drawings 121, & 122 for existing and 221 & 222 for proposals.

a) Carefully remove internal timber beads from mullions to allow access to fixings.
b) Cut fixings and remove windows to workshop.
c) Remove all glass and putty.
d) Shot blast windows and allow inspection to determine defects.
e) Form new section of glazing bars from 20mm x 5mm strip steel to infill area of chopped out metalwork to WG2 and weld in place.
f) Form new laches to windows where missing. (2 No.)
g) Thermally zinc spray and decorate with approved paint.
h) Reglaze with Tatra P1 Restoration glass and approved putty.
i) Reinstall and trim with new hardwood beads.

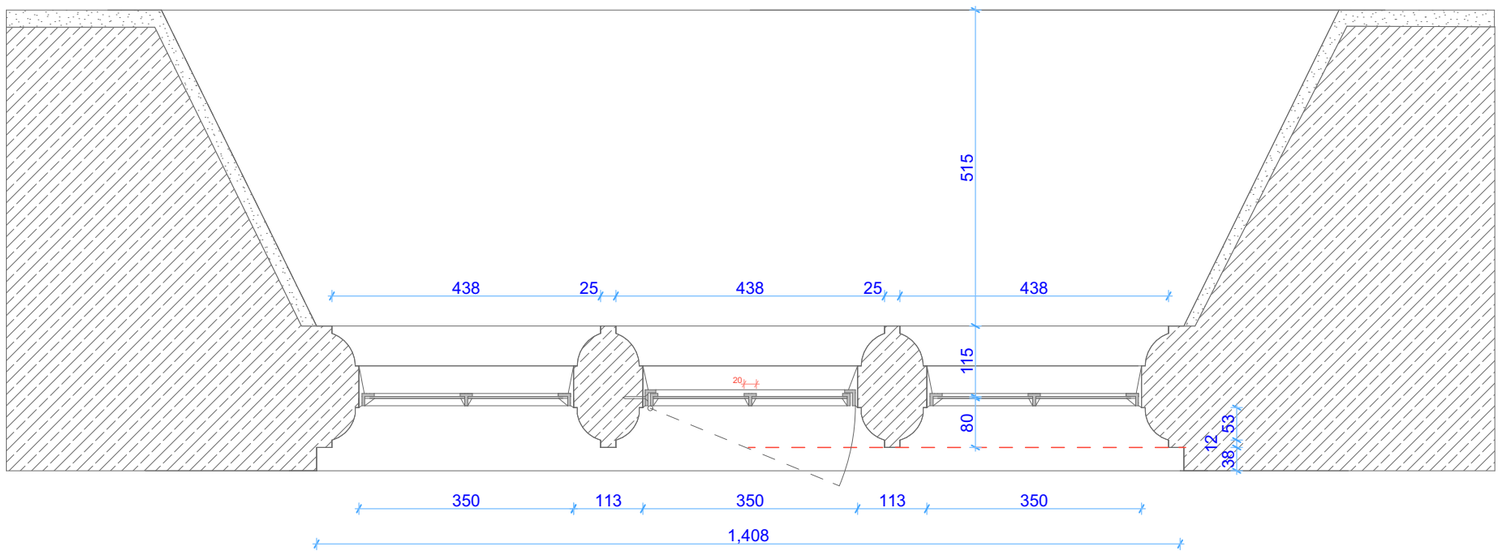

THIS DRAWING IS INTENDED FOR TENDER ISSUE ONLY.
Do not construct from this drawing. All dimensions and details will need confirmation prior to undertaking works. This drawing creaeted from a digital survey and will accurately scale but is best printed at the paper size recorded below.

HBA
HARRISON BROOKES ARCHITECTS 01373 303453

Rev	Details	Issue Date

PROJECT:	HOP POLE INN LIMPLEY STOKE	BA2 7FS	HBA 345
DRAWING:	WG1 PROPOSED	SCALE: 1:10	221 P1
		SIZE: A3	
	PHASE 1 WORKS (TENDER)	DATE: 13/03/2023	PHASE 1