WG 3

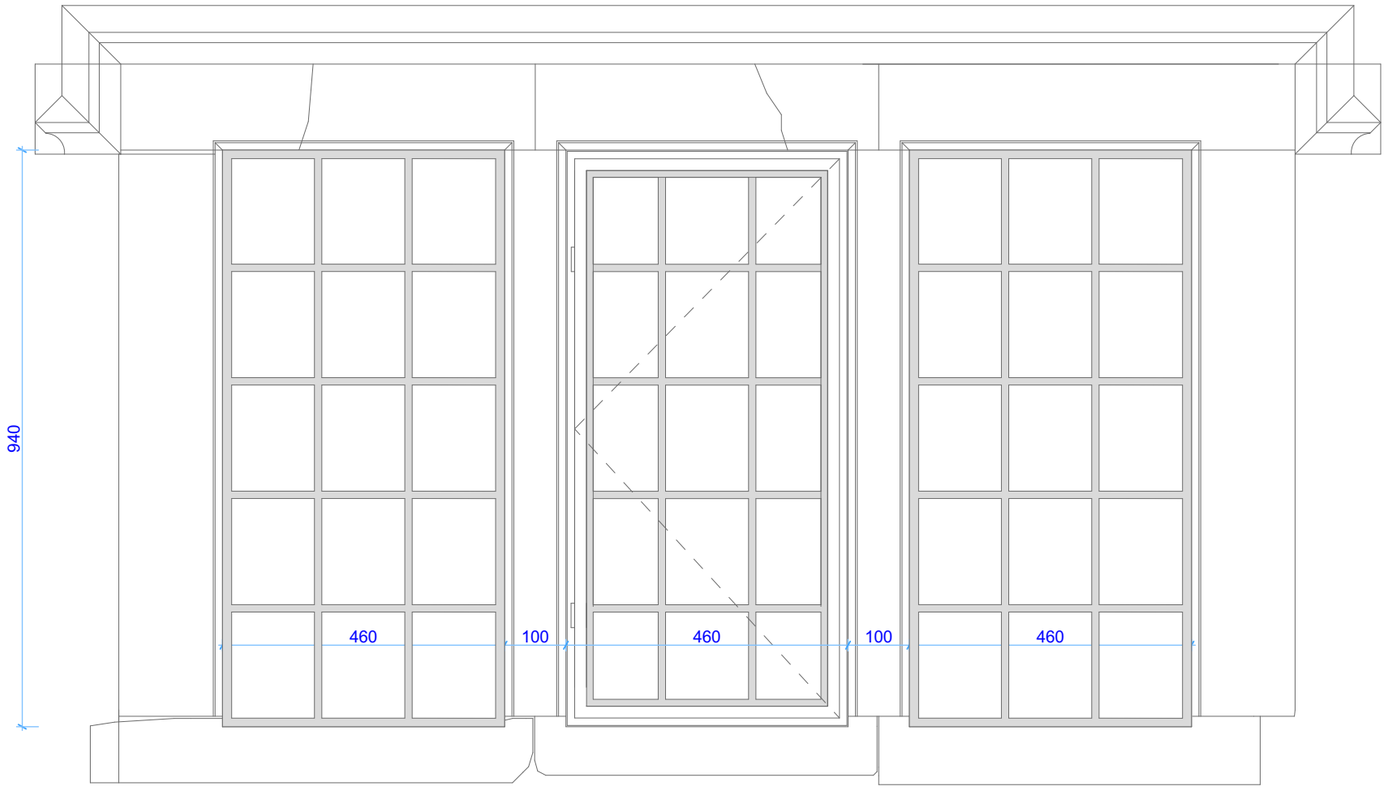

7.1.2 WG3 WF1 WF2 and WF3 **REPAIR OPTION** for existing timber windows

Refer to drawings 123, 130, 131 and 132 for existing drawings.

a) Remove all openable windows and set aside. (4 No.)
b) Remove any (3 No.) broken panes of glass and associated putty
c) Carefully remove all paint from glass using nonabrasive methods and remove loose putty throughout.
d) Sand down all painted surfaces taking care to maintain arises on timber profiles.
e) Allow inspection of prepared windows by the Architect.
f) Allow for replacing 6 No. small panes of glass with Tatra P1 and reputtying areas of lost putty.
g) Allow a PS of £1000 for repairs as yet undetermined.
h) Redecorate windows with 1 coat of undercoat and 2 coats of topcoat with approved paint and colour.

7.1.3 WG3 WF1 WF2 and WF3 **REPLACEMENT OPTION**

Refer to drawings 223, 230, 231 and 232.

a) Remove all timber batten holding lights in place and remove all timber casements both fixed and opening.
b) Allow inspection of masonry to determine any staddle bar holes.
c) Supply and install 8 fixed leaded lights as detailed in the above drawings but adjusted to suit site findings.
d) For pricing purposes assume Tatra P1 Conservation Glass or similar approved handmade glass and ½" lead cames.
e) Supply and install 4 opening lights by Clement windows or similar specialist manufacturer. (All details to be agreed with the Architect)

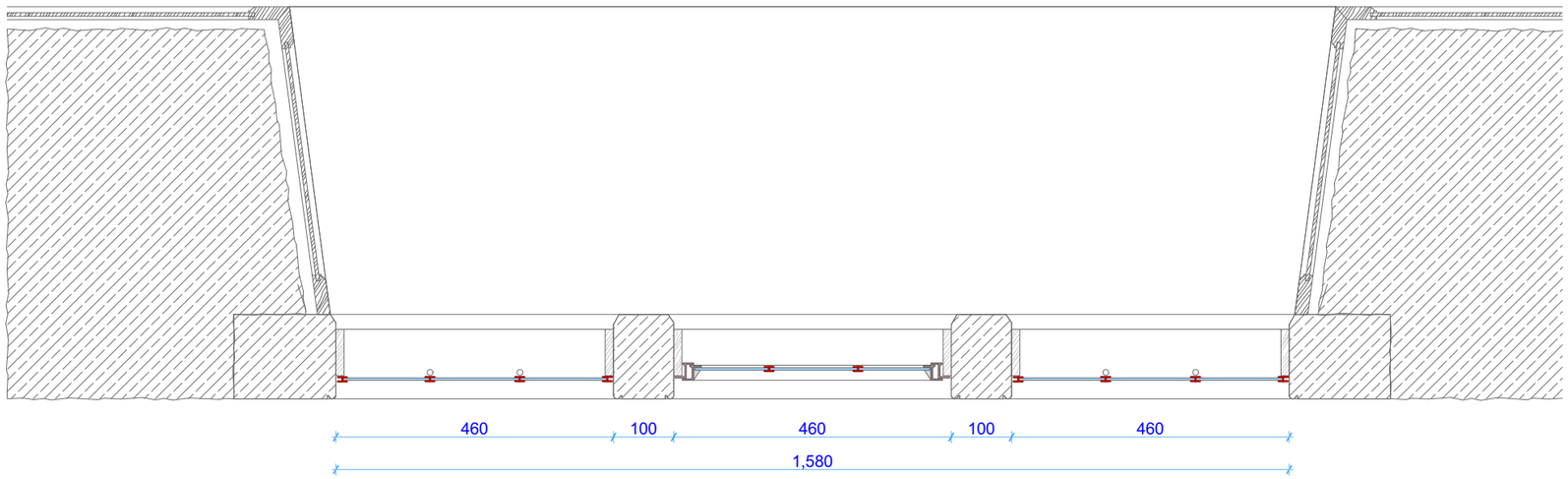

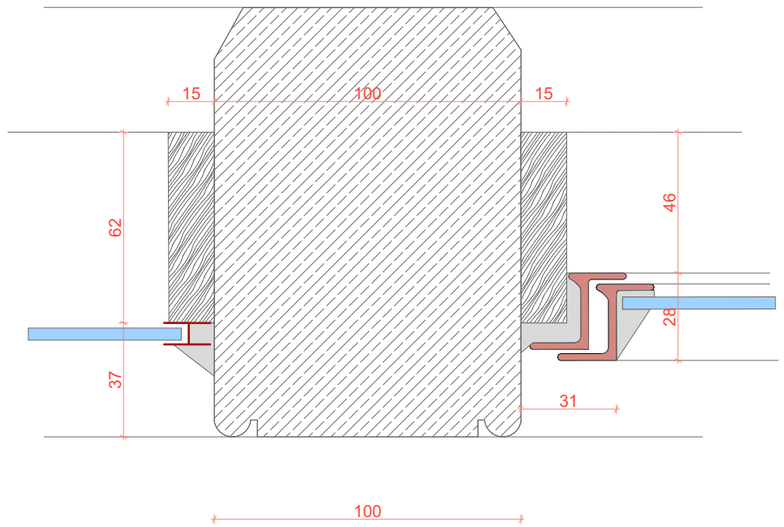

THIS DRAWING IS INTENDED FOR TENDER ISSUE ONLY.
Do not construct from this drawing. All dimensions and details will need confirmation prior to undertaking works. This drawing creaeted from a digital survey and will accurately scale but is best printed at the paper size recorded below.

HBA
HARRISON BROOKES ARCHITECTS 01373 303453

Rev	Details	Issue Date

PROJECT:	HOP POLE INN LIMPLEY STOKE	BA2 7FS	HBA 345
DRAWING:	WG3 PROPOSED	SCALE: 1:10, 1:2	223 P1
		SIZE: A3	
	PHASE 1 WORKS (TENDER)	DATE: 08/03/2023	PHASE 1