NOTE: ALL STRUCTURAL ITEMS SHOWN ON DRAWING WILL BE BUILT AND FIRE PROTECTED BY THE TIME THE CAT -B CONTRACTORS WORKS BEGIN. FOR THE CAT-B TENDER THERE IS NO REQUIREMENT TO PRICE THE STEEL SHOWN ON THIS DRAWING OR FOR ANY FIRE PROTECTION TO THE STEEL SHOWN ON THIS DRAWING. THE ONLY STEEL WITHIN THE CAT-B FIT OUT PACK IS SHOWN IN GREEN ON DRAWINGS DI-WSL-00-XX-20-001-C02 & DI-WSL-00-XX-21-00100 ALL OTHER DRAWINGS ARE PROVIDED FOR INFORMATION AND SHOULD NOT BE CONSIDERED WHEN PRICING.

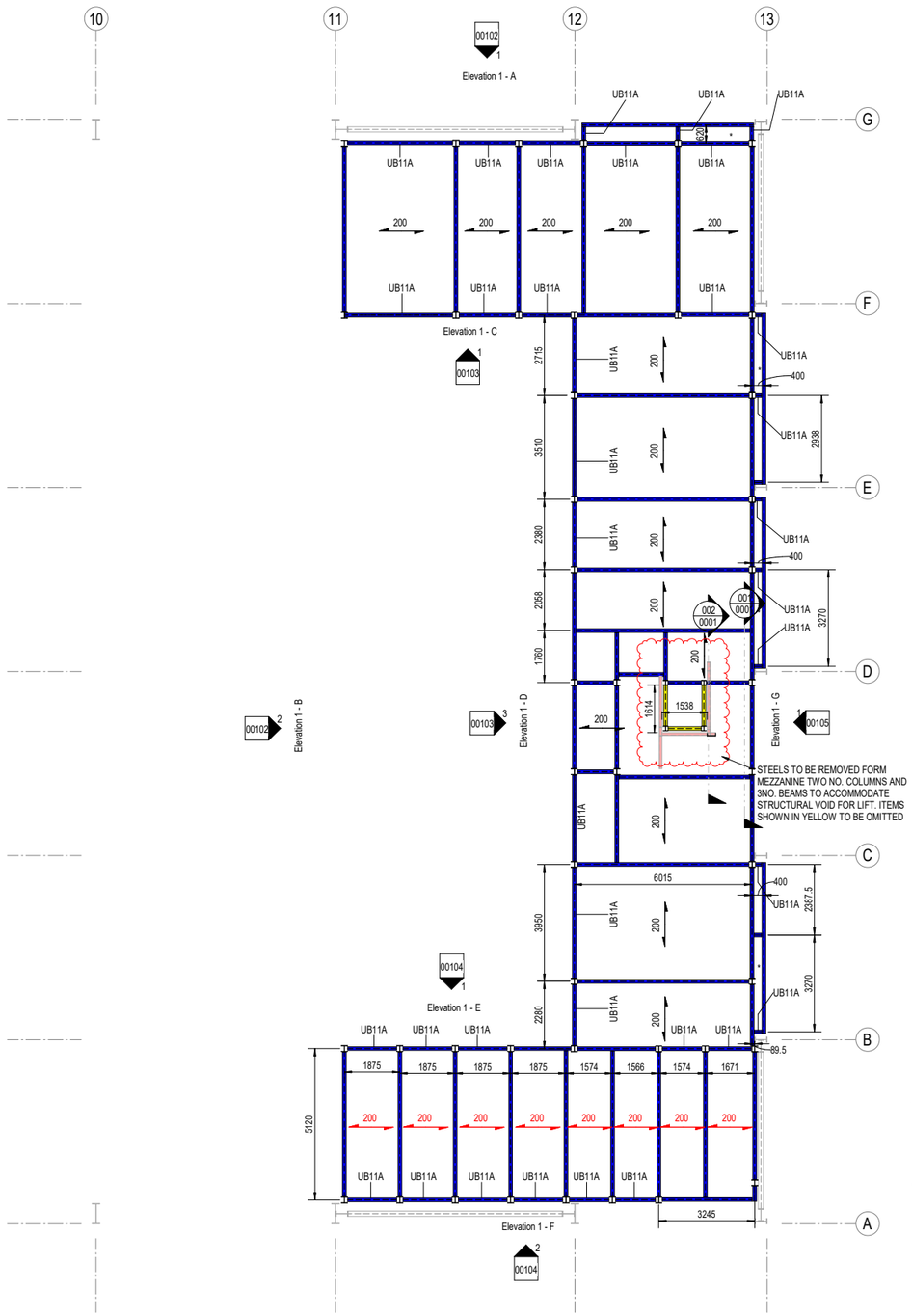


* OVERHANG DETAILS NEED TO LEAVE 100mm FROM EXISTING CLADDING FROM INTERNAL LINING OF EXISTING STRUCTURE. THEREFORE DIMENSION PROVIDED IS AN ESTIMATE AND SHOULD BE CHECKED ON SITE BEFORE FABRICATION.

200 — 20063208 @ 600C/C - WITH TIE BAR AT MID SPAN HADLEY STEEL SECTIONS. FLOOR BUILD UP TO ARCHITECTS DETAILS

200 — 20063208 @ 400C/C - WITH WITH TIE BAR AT MID SPAN HADLEY STEEL SECTIONS. FLOOR BUILD UP TO ARCHITECTS DETAILS

| FRAME-STEEL-WEIGHT-BEAM | | | | |
|---|---|---|---|---|
| WREF | TYPE | TOTAL LENGTH (m) | MASS (t) | QTY |
| BAR FLAT | | | | |
| FLT186 | FLT100x8 | 26.813 | 0.168 | 5 |
| PARALLEL FLANGE CHANNEL | | | | |
| PFC13 | PFC300x90x41 | 27.305 | 1.130 | 13 |
| UNIVERSAL BEAM | | | | |
| UB11A | UB356x127x33 | 81.796 | 2.705 | 44 |
| UB11B | UB356x127x39 | 218.691 | 8.544 | 52 |
| | | 354.605 | 12.548 | 114 |

All new steel is shown in Blue
UB356x127x39 U.N.O

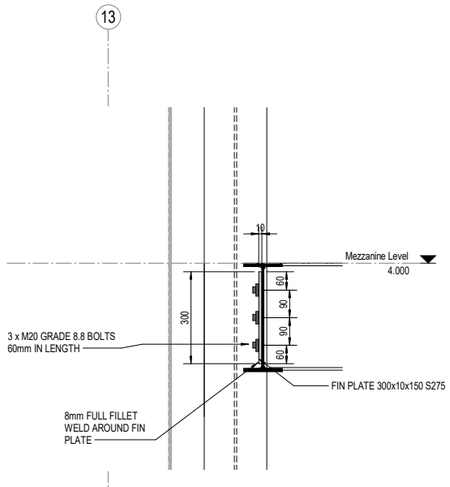


DETAIL 4
BEAM TO COLUMN CONNECTION ECCENTRIC
( 1 : 10)

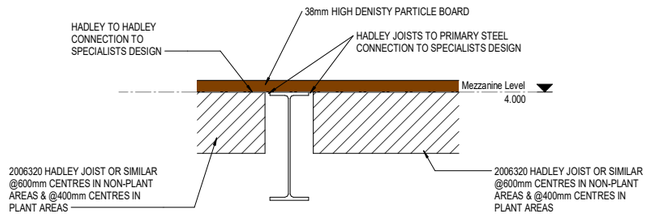


DETAIL 001
HADLEY TO STEEL CONNECTION
( 1 : 10)

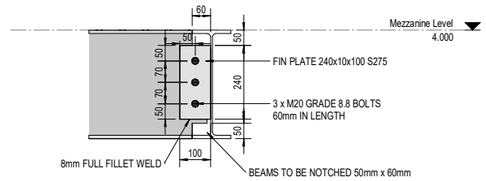


DETAIL 002
BEAM TO BEAM CONNECTION
( 1 : 10)

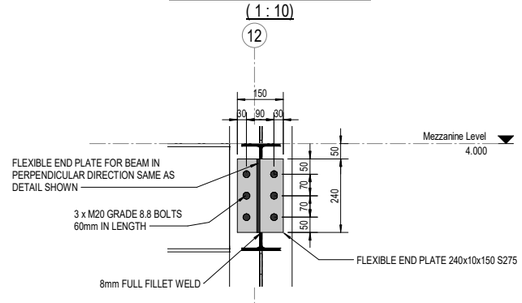


DETAIL 003
BEAM TO COLUMN CONNECTION
( 1 : 10)

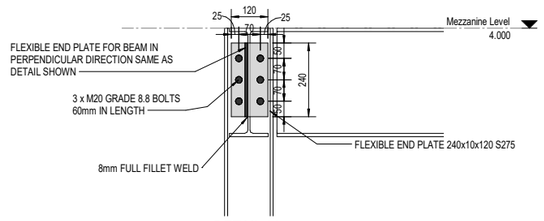


DETAIL 005
BEAM TO COLUMN CONNECTION 002
( 1 : 10)

(APPLICABLE WHERE DETAIL 003 CANNOT FIT)

This drawing should not be scaled. Dimensions to be verified on site. Any discrepancies should be referred to the Engineer prior to work being put in hand. This drawing is the property of Waterman Structures Limited and is issued on the condition that it is not copied, reproduced, retained or disclosed to any unauthorised person, either wholly or in part without the consent in writing of Waterman Structures Limited
Pickfords Wharf Clink Street London SE1 9DG United Kingdom
t +44 20 7928 7888

## GENERAL NOTES

1. ALL DIMENSIONS ARE IN MILLIMETERS UNO.
2. DO NOT SCALE FROM THIS DRAWING
3. THIS DRAWING SHOULD BE READ IN CONJUNCTION WITH ALL ENGINEERS, ARCHITECTS AND OTHER RELEVANT DRAWINGS AND SPECIFICATIONS
4. ALL WORK MUST BE CARRIED OUT IN SUCH A WAY THAT ALL REQUIREMENTS OF THE HEALTH AND SAFETY AT WORK ACT ARE SATISIFIED
5. ALL WORK IS TO BE CARRIED OUT IN COMPLIANCE WITH THE REQUIREMENTS OF THE RELEVANT STATUTORY AUTHORITIES AND REGULATIONS.
6. A SITE SURVEY SHOULD BE CARRIED OUT TO CONFIRM DIMENSIONS INDICATED ON DRAWINGS.

| Rev. | Date | Description | By |
|---|---|---|---|
| F02 | 02/10/18 | REVISED AS CLOUDED | MJH |
| F01 | 27/09/18 | REVISED AS CLOUDED | MJH |
| D02 | 13/09/18 | REVISED AS CLOUDED | MJH |
| D01 | 13/09/18 | REVISED AS CLOUDED | MJH |
| C03 | 11/09/18 | REVISED AS CLOUDED | MJH |
| C02 | 02/08/18 | REVISED AS CLOUDED | MJH |
| C01 | 09/07/18 | ISSUED FOR TENDER | MJH |
| P1 | - | - | - |

Amendments

Project: DISC

Title: GENERAL ARRANGEMENT MEZZANINE LEVEL

Client: SAC

waterman

5th Floor 1 Cornwall Street Birmingham B3 2DX
t +44 121 212 7700
mail@watermangroup.com www.watermangroup.com

Status: AS BUILT

| Designed By | Checked By | Waterman Ref. |
|---|---|---|
| MH | PS | STR14697 |
| **Drawn By** | **Date** | **Scales @ A1** |
| RL | JUNE 2018 | As indicated |

Project - Originator - Volume - Level - Type - Role - Number: DI-WSL-00-01-20-00002

Revision: F02

DISC