Project Number | Drawing Number | Revision

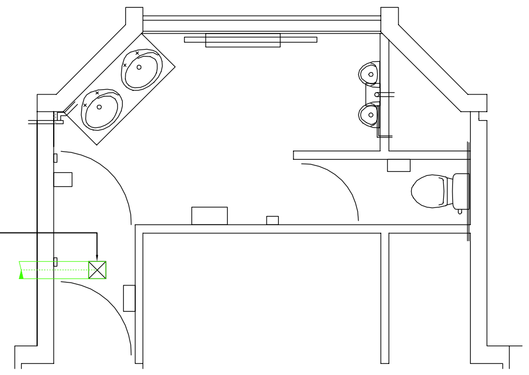

Existing grill and ductwork located in ceiling void to be stripped out and disposed of. remaining ductwork blanked off.

Link 3 Men Ground Floor Existing Plan

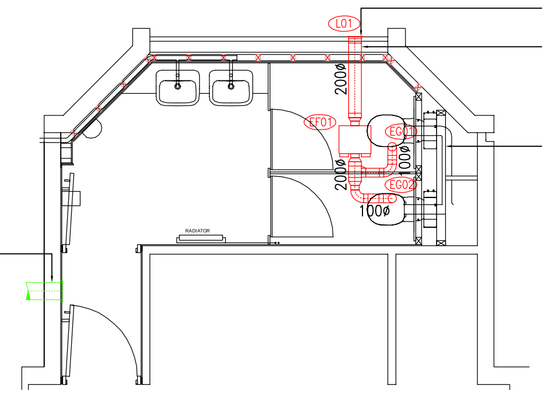

200ø EXTERNAL LOUVRE C/W INSECT MESH.

PENETRATION THROUGH EXISTING WALL ABOVE WINDOW TO ALLOW FOR EXTRACT DUCT.

EXTRACT FAN DUCT MOUNTED IN CEILING VOID.

EXISTING DUCTWORK BLANKED OFF.

Proposed floor plan Link 3 Men Ground Floor

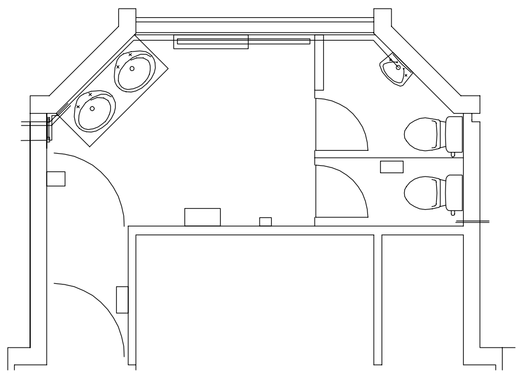

Link 3 & 5 Ladies First Floor Existing Plan

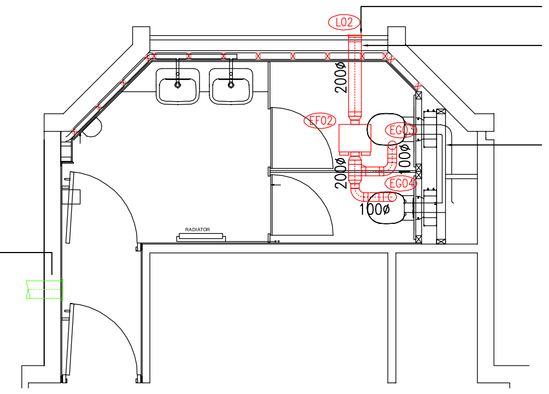

200ø EXTERNAL LOUVRE C/W INSECT MESH.

PENETRATION THROUGH EXISTING WALL ABOVE WINDOW TO ALLOW FOR EXTRACT DUCT.

EXTRACT FAN DUCT MOUNTED IN CEILING VOID.

EXISTING DUCTWORK BLANKED OFF.

Proposed floor plan Link 1 Ladies First Floor

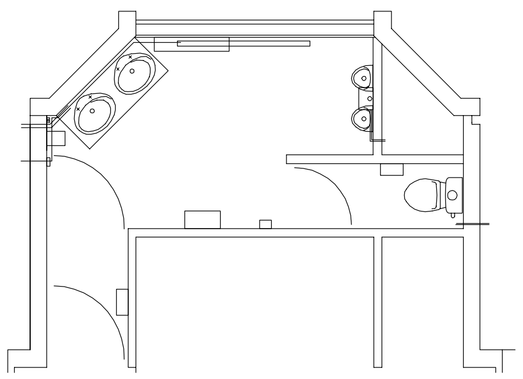

Link 5 Men Ground Floor Existing Plan

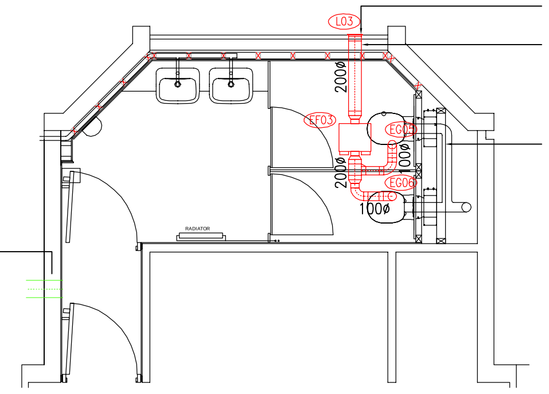

200ø EXTERNAL LOUVRE C/W INSECT MESH.

PENETRATION THROUGH EXISTING WALL ABOVE WINDOW TO ALLOW FOR EXTRACT DUCT.

EXTRACT FAN DUCT MOUNTED IN CEILING VOID.

EXISTING DUCTWORK BLANKED OFF.

Proposed floorplan Link 5 Men Ground Floor

LEGEND:

– PROPOSED DUCTWORK

– EXISTING DUCTWORK

NOTE:

1. SCALED DIMENSIONS MUST NOT BE TAKEN FROM THIS DRAWING.

2. THIS DRAWING MUST BE READ IN CONJUNCTION WITH ALL RELEVANT DRAWINGS, DOCUMENTS & INFORMATION.

3. ANY DISCREPANCY ON THIS DRAWING MUST BE REFERRED TO THE ENGINEER & CLARIFICATION OBTAINED BEFORE COMMENCEMENT OF WORK.

4. ALL DIMENSIONS MUST BE CHECKED ON SITE BEFORE THE COMMENCEMENT OF WORK OR THE PREPARATION OF SPECIALISTS.

5. WHERE MAKE UP AIR IS REQUIRED FOR THE VENTILATION SYSTEMS, DOORS SHALL BE UNDERCUT TO SUIT.

6. ALL EXTRACT FAN CONTROLS TO BE LINKED WITH LOCAL LIGHTING CIRCUIT.

7. THE POSITIONS OF ALL INSTALLATIONS/ TERMINALS AND EQUIPMENT ARE APPROXIMATE. EXACT POSITIONS SHALL BE CO-ORDINATED ON SITE BY THE MECHANICAL CONTRACTOR WITH ALL ASSOCIATED TRADES. IN THIS RESPECT THE MECHANICAL CONTRACTOR SHALL ALLOW FOR LOCATING THE TERMINALS WITHIN 1000mm IN ANY DIRECTION TO THAT SHOWN, TO AGREE WITH FINAL CEILING/ ELEVATION LAYOUT AT NO COST TO THE CONTRACT.

8. CONTRACTOR TO CO-ORDINATE HEIGHT OF CEILING VOID WITH BUILDING PRIOR TO THE INSTALLATION OF THE NEW SUSPENDED CEILING TO ENSURE ADEQUATE CLEARANCE FOR MECHANICAL EXTRACT FAN AND DUCT WORK.

9. THE MECHANICAL CONTRACTOR SHALL VISIT THE SITE DURING THE TENDER PERIOD TO ASCERTAIN CONDITIONS AND TO SATISFY THEMSELVES AS TO THE ACCESSIBILITY OF THE SITE, THE FULL EXTENT AND CHARACTER OF THE SITE, THE AVAILABILITY OF THE WORKS AND OF ALL-LOCAL CONDITIONS AND RESTRICTIONS.

10. NO EXISTING SERVICES DRAWINGS WERE AVAILABLE DURING DESIGN – CONCEALED SERVICES HAVE BEEN ASSUMED AND WILL NEED TO BE CONFIRMED ON SITE.

ALL CAD DATA IS ISSUED FOR REFERENCE PURPOSES ONLY TO ASSIST IN THE COORDINATION OF WORKS AND IS SUPPLEMENTARY TO THE FORMALLY ISSUED HARD COPY* CONTRACT DRAWINGS. THE CAD DATA IS PROVIDED 'AS IS' WITHOUT WARRANTY OF ANY KIND.

IN ALL INSTANCES THE CONTRACT ISSUE HARD COPY* DRAWINGS WILL GOVERN. IT IS THE RESPONSIBILITY OF THE RECIPIENT TO CHECK ALL DIGITAL INFORMATION AGAINST THE CONTRACT DOCUMENTATION.

IF CAD DATA FROM THIS DRAWING IS INTRODUCED INTO THE CONTRACTOR OR SUB-CONTRACTOR'S OWN CAD OR OTHER SYSTEM, PARSONS BRINCKERHOFF LTD CAN TAKE NO RESPONSIBILITY FOR ITS ACCURACY.

IN NO EVENT SHALL PARSONS BRINCKERHOFF LTD BE LIABLE FOR ANY LOSS OR DAMAGE HOWSOEVER CAUSED AND HOWSOEVER ARISING AS A RESULT OF, OR IN CONNECTION WITH THE USE OR MISUSE OF THE CAD DATA SUPPLIED.

FOR ALL CAD DATA PROVIDED ELECTRONICALLY, PARSONS BRINCKERHOFF LTD ACCEPTS NO RESPONSIBILITY FOR ANY VIRUS TRANSMISSION OR ANY FAILURE ON THE PART OF THE END USER IN HAVING ADEQUATE VIRUS CHECKING SOFTWARE INSTALLED.

*HARD COPY REFERS TO PAPER PRINTS, OR 'FIXED' ELECTRONIC VERSIONS SUCH AS ADOBE .PDF OR AUTODESK .DWF.

Rev	Date	Description	By	Chk	App

TENDER

Client:

CENTRE FOR ECOLOGY AND HYDROLOGY

Site/Project:

CEH WALLINGFORD WASHROOM REFURBISHMENT

Title:

MECHANICAL VENTILATION LAYOUT

Drawn:		Checked:	
Designed:		Approved:	
Date: 23/04/2015	Scale: 1:50	A1	Sheet: 1 OF 1

Project Number:	Drawing Number:	Revision:
	ML(57)01	