Schedule 2.2 - Lot 2

Performance Levels

Version 5.2

This document is based on Schedule 2.2 of the Crown Commercial Services Model Services Agreement v1.0 and has been adapted for use by the Emergency Services Mobile Communications Programme.

© Crown copyright

CHANGE HISTORY

Version No.	Date	Details of Changes included in Update	Author(s)	Document Number
4.0	20.10.15	Execution version	ESMCP	35117092.27
4.1	31.03.19	Conformance version	DLAP	95403520.3
5.0	14.05.19	CAN 500 Execution version	DLAP	96246587.1
5.1	08/06/2020	Conformed copy incorporating amendments agreed through Change Authorisation Notes CR255, CR340	MSI	
5.2	11/06/2020	Amendments for CR0255 in response to Authority comments	MSI	

This document is based on Schedule 2.2 of the Crown Commercial Services Model Services Agreement v1.0 and has been adapted for use by the Emergency Services Mobile Communications Programme.

© Crown copyright

Contents

1 Introduction 5

Part A: Performance Management 6

2 Performance Indicators 6

3 Initial Service Period 6

4 Service Points 6

5 Repeat KPI Failures 7

6 Accrual of Service Points in respect of multiple KPI Failures arising from same root cause 7

7 Permitted Maintenance 8

8 Service Credits 9

PART B: Performance Monitoring and Review 10

9 Performance Monitoring and Performance Review 10

PART C: Performance Indicators 15

10 Availability 15

11 Response Times 16

12 Service Desk Response Times 16

13 Incident Handling 16

14 Service Incident Identification Time, Response and Fix Times 18

15 Variation As A Result Of 3GPP Related Standards 23

16 Permissible Delays 23

16A Speech Delay for Control Room Interface 24

16B Group Call Setup Time for Control Room Interface 24

PART C: Performance Indicators 25

17 Overview of KPIs and SPIs 25

18 Systems Integration 25

This document is based on Schedule 2.2 of the Crown Commercial Services Model Services Agreement v1.0 and has been adapted for use by the Emergency Services Mobile Communications Programme.

© Crown copyright

19 Network and IT Infrastructure 25

20 Public Safety Communications 25

21 User Device Management 26

22 Customer Support 26

23 Service Management 27

24 Commercial Management 28

25 Details of KPIs and SPIs 29

ANNEX 1: Categorisation of Services, Services Hours, Permitted Maintenance and Recovery Priority 106

This document is based on Schedule 2.2 of the Crown Commercial Services Model Services Agreement v1.0 and has been adapted for use by the Emergency Services Mobile Communications Programme.

© Crown copyright

1 Introduction

1.1 This Schedule sets out the standards of performance that the Authority requires of the Supplier in respect of the Services. This Schedule is split into three parts:

1.1.1 Part A provides an overview to the Performance Indicators, the Initial Service Period, the calculation of Service Points including in respect of Repeat KPI Failures and Service Credits.

1.1.2 Part B sets out the obligations with regards performance monitoring.

1.1.3 Part C provides an overview of the Performance Indicators applicable to each Service (and their categorisation as a KPI or a SPI) and contains for each Performance Indicator, their definitions, descriptors and details, method of calculation, Service Period, Minimum Service Thresholds of the Performance Indicators and the Service Points applicable.

This document is based on Schedule 2.2 of the Crown Commercial Services Model Services Agreement v1.0 and has been adapted for use by the Emergency Services Mobile Communications Programme.

© Crown copyright

Part A: Performance Management

2 Performance Indicators

2.1 Part C sets out the Key Performance Indicators ("**KPIs**") and Subsidiary Performance Indicators ("**SPIs**") which shall be used to measure the performance of the Services.

2.2 The Supplier shall monitor and report its performance against each Performance Indicator and shall submit to the Authority a Performance Monitoring Report detailing its actual Service performance level in accordance with Part B.

2.3 Service Points and Service Credits shall accrue for any KPI Failure and shall be calculated in accordance with Paragraphs 4 and 5.

3 Initial Service Period

3.1 If the Operational Service Commencement Date on which the Service is delivered is:

3.1.1 ten (10) or fewer days before the end of the calendar month in which it occurs, then the period over which the Service is delivered in that calendar month will be added to the subsequent calendar month and the Service Period for the subsequent calendar month shall include the days over which the Service is first delivered; or

3.1.2 more than ten (10) days before the end of the calendar month in which it occurs, then the Service Period for such calendar month shall be the period from the moment the Service is first delivered until the end of that calendar month,

(the "**Initial Service Period**")

3.2 The Operational Service Commencement Date for each KPI and SPI in relation to each ESN Product shall be in relation to each ESN Product, immediately after the date upon which such ESN Product passes the exit criteria for Gate 5 in accordance with Schedule 6.1 (Implementation Plan)in respect of that ESN Product unless otherwise set out in the ESN Products and Services Master Catalogue.

4 Service Points

4.1 If the level of performance of the Supplier during a Service Period achieves the Minimum Service Threshold in respect of a Key Performance Indicator, no Service Points shall accrue to the Supplier in respect of that Key Performance Indicator.

4.2 If the level of performance of the Supplier during a Service Period is below the Minimum Service Threshold in respect of a Key Performance Indicator, Service Points shall accrue to the Supplier in respect of that Key Performance Indicator as set out in the remainder of this Paragraph 4 and in Paragraphs 5 and 6.

This document is based on Schedule 2.2 of the Crown Commercial Services Model Services Agreement v1.0 and has been adapted for use by the Emergency Services Mobile Communications Programme.

© Crown copyright

4.3 Service Points shall be calculated as follows:

4.3.1 Subject to Paragraph 6, the initial calculation of Service Points that shall accrue to the Supplier in respect of any KPI Failure shall be the applicable number for the level of performance set out for each Performance Indicator in Paragraphs 10 to 24 and 25 ("**Service Point Initial Calculation**").

4.3.2 The "**Final Service Point Calculation**" is derived by performing the calculation (if applicable) for Repeat KPI Failures set out in Paragraph 5.

4.4 The Final Service Point Calculation is multiplied by the "**Weighting Factor**" for each Performance Indicator to calculate the relevant Service Credits pursuant to Schedule 7.1.

5 Repeat KPI Failures

5.1 In addition to any obligations of the Supplier under this Agreement to provide a Rectification Plan, if a KPI Failure occurs in respect of the same Key Performance Indicator:

5.1.1 two times in any three consecutive Service Periods; or

5.1.2 three times in any five consecutive Service Periods; or

5.1.3 four times in any twelve consecutive Service Periods;

(the "**Repeat Trigger**"), upon such Repeat Trigger such KPI Failure and any subsequent KPI Failure falling within the applicable Service Periods for the Repeat Trigger shall be deemed a "**Repeat KPI Failure**".

5.2 The number of Service Points that shall accrue to the Supplier in respect of a KPI Failure that is a Repeat KPI Failure shall be calculated as follows:

SP = P x 2 where:

SP = the number of Service Points that shall accrue for the Repeat KPI Failure; and

P = the applicable number of Service Points for that KPI Failure as set out for each KPI in Part C of this Schedule according to its category as a Minor KPI Failure, Serious KPI Failure, Severe KPI Failure or KPI Service Threshold Failure.

6 Accrual of Service Points in respect of multiple KPI Failures arising from same root cause

Except for KPI Failures which relate to Response Times; Incident Handling; Service Incident Identification, Response and Fix Times; and Service Management USS1 to USS9 and USR1 to USR6 Performance Indicators:

6.1.1 additional Service Points shall not accrue for any KPI Failure in addition to the original KPI Failure where such additional KPI Failure:

This document is based on Schedule 2.2 of the Crown Commercial Services Model Services Agreement v1.0 and has been adapted for use by the Emergency Services Mobile Communications Programme.

© Crown copyright

(a) is in respect of the following Performance Indicators: USA1; USP1; USP2; USP3; USP4; USP5; USA5; USA6; USP6; USP7; USP8; USA8; USA9; USA10; USA11; USA4; USA3; USA7 and USS12; and

(b) such additional KPI Failure:

(i) occurs in the same Service Period as the original KPI Failure; and

(ii) is caused at the same time and by the same (or substantially the same) root cause as the original KPI Failure.

7 Permitted Maintenance

7.1 For Tier One Services (as identified in the descriptions of Performance Indicators set out in Part C of this schedule 2.2) the Supplier shall be allowed no periods of Service Downtime for Permitted Maintenance.

7.2 For Tier Two Services (as identified in the descriptions of Performance Indicators set out in Part C of this schedule 2.2) the Supplier shall be allowed to request a maximum of [….✂….] Service Downtime for Permitted Maintenance in any one Service Period which shall take place between [….✂….], subject to the provision by the Supplier to the Authority of written risk assessments in the form specified by the Authority and subject to the Service Downtime for Permitted Maintenance being identified in the Maintenance Schedule to be approved in advance by the Authority.

7.3 For Tier Three Services (as identified in the descriptions of Performance Indicators set out in Part C of this schedule 2.2) the Supplier shall be entitled to Service Downtime for Permitted Maintenance, subject to providing five (5) Working Days' notice to the Authority in writing and subject to such Service Downtime for Permitted Maintenance being between [….✂….] [….✂….] in writing by the Authority.

7.4 Where the Authority has approved Permitted Maintenance for a Tier Two Service the Authority may request that the Supplier not undertake such agreed maintenance in cases where operational necessity means that such Tier Two Services will be needed at the period previously agreed. In the event of such a request the Supplier shall comply and agree with the Authority a time at which the Permitted Maintenance for a Tier Two Service may be carried out. Where such delay increases the risk that the Supplier may not meet its Minimum Service Threshold in respect of a KPI or SPI, the Supplier shall notify this risk in writing to the Authority Representative within five (5) Working Days after becoming aware. Where the Authority makes such a request during a period of Permitted Maintenance the Supplier shall make reasonable efforts to comply in consideration that partially completed maintenance may not be capable of being interrupted immediately.

7.5 The Authority may reasonably request in advance that Tier Three Services be excluded from Permitted Maintenance for periods of time for operational reasons. The Supplier shall make reasonable efforts to accommodate such requests.

This document is based on Schedule 2.2 of the Crown Commercial Services Model Services Agreement v1.0 and has been adapted for use by the Emergency Services Mobile Communications Programme.

© Crown copyright

8 Service Credits

8.1 Schedule 7.1 (Charges and Invoicing) sets out the mechanism by which Service Points shall be converted into Service Credits.

8.2 The information contained in the Performance Monitoring Reports shall be included in the information used by the Authority to verify the calculation of any Deductions or Service Credits in each Service Period.

This document is based on Schedule 2.2 of the Crown Commercial Services Model Services Agreement v1.0 and has been adapted for use by the Emergency Services Mobile Communications Programme.

© Crown copyright

PART B: Performance Monitoring and Review

9 Performance Monitoring and Performance Review

9.1 Performance Monitoring Report

Within ten (10) Working Days after the end of each Service Period, the Supplier shall provide a written report to the Authority Representative which summarises the performance by the Supplier against each of the Performance Indicators (the "**Performance Monitoring Report**"). The Performance Monitoring Report shall constitute Management Information and shall be submitted by the Supplier in such format and using such process as determined by the Authority from time to time and shall contain, as a minimum, the following information.

9.1.1 Information in respect of the Service Period just ended

(a) for each Key Performance Indicator and Subsidiary Performance Indicator, the Supplier's actual performance achieved over the Service Period, and that achieved over the previous 3 Service Periods including details of the extent and number of instances where the Supplier's performance failed to meet the Minimum Service Thresholds and whether any Repeat Trigger has been triggered and which Repeat Triggers have been triggered (if any);

(b) a summary of all Performance Failures of the Supplier that occurred during the Service Period and details of whether there are any (and which are) Critical Performance Failures, Defaults, Intervention Trigger Events, KPI Failures, Material KPI Failures, KPI Service Threshold Failures, Minor KPI Failures, Notifiable Defaults, SPI Failures, Rectification Plan Failures, Repeat KPI Failures, Serious KPI Failures, Severe KPI Failures or Unacceptable KPI Failures);

(c) the Supplier's calculation of the applicable Service Points and Service Credits, taking into account reconciled Service Credit calculations resulting from the agreed outcome of any breach analysis / root cause analysis activity (including the exclusion of liability for the acts or omissions of Other Suppliers), for the Performance Failures the subject of Paragraph 9.1.1(a) and 9.1.1(b), taking account of the reconciliation of historical service credits;

(d) which Performance Failures from the Service Period or any prior Service Period remain and details of the progress in resolving them;

(e) for any KPI Failures, Intervention Trigger Events or Rectification Plan Failures occurring during the Service Period, its cause and the action being taken to remedy such failure, address its cause and reduce the likelihood of or prevent recurrence;

(f) the status of any outstanding Rectification Plan processes, including:

(i) whether or not a Rectification Plan has been agreed with the Authority; and

This document is based on Schedule 2.2 of the Crown Commercial Services Model Services Agreement v1.0 and has been adapted for use by the Emergency Services Mobile Communications Programme.

© Crown copyright

(ii) where a Rectification Plan has been agreed with the Authority, a summary of the Supplier's progress in implementing that Rectification Plan;

(g) the conduct and performance of any agreed periodic tests that have occurred, such as the annual failover test of the BCDR Plan;

(h) relevant particulars of any aspects of the Supplier's performance which fail to meet the requirements of this Agreement;

(i) such other details as the Authority may reasonably require from time to time; and

9.1.2 Information in respect of previous Service Periods

(a) a rolling total of the number of Performance Failures that have occurred over the past six Service Periods;

(b) the amount of Service Credits that have been incurred by the Supplier over the past six Service Periods; and

(c) the conduct and performance of any agreed periodic tests that have occurred in such Service Period,

and,

9.1.3 Other Information

(a) any results of the External Competency Assessment pursuant to Paragraph 9.5; and

(b) any results of any Satisfaction Surveys pursuant to Paragraph 9.6,

and,

9.1.4 Information in respect of the next three months

(a) any scheduled periodic test planned for the next three months including such as the annual failover test of the BCDR Plan; and

(b) any scheduled Service Downtime for Permitted Maintenance and Updates that has been agreed between the Authority and the Supplier for the next three months.

9.2 Single Supplier Board

9.2.1 The Performance Monitoring Report shall be reviewed and their contents approved by the Authority at the relevant meeting of the Single Supplier Board to be conducted on a monthly basis (unless otherwise agreed) (the "**Performance Review Meeting**"). The Single Supplier Board shall (unless otherwise agreed):

This document is based on Schedule 2.2 of the Crown Commercial Services Model Services Agreement v1.0 and has been adapted for use by the Emergency Services Mobile Communications Programme.

© Crown copyright

(a) be scheduled to take place within five (5) Working Days after the Performance Monitoring Report is due to be submitted by the Supplier:

(b) take place at such location and time (within the normal business hours of the Authority) as the Authority shall reasonably require (unless otherwise agreed in advance); and

(c) be attended by the Supplier and the Authority personnel identified in Single Supplier Board Representation as set out in Annex 3 of Schedule 8.1 (Governance).

9.2.2 The Authority shall be entitled to raise before, during or after the Single Supplier Board meeting any questions and/or request any information from the Supplier regarding any Performance Failure. The Supplier shall respond to any such questions and/or request for information within five (5) Working Days after the date such question and/or request for information is notified to the Supplier by the Authority.

9.3 Performance Records

9.3.1 The Supplier shall keep appropriate, accurate and complete documents and records (including Supplier Service Desk records including call histories, staff records, timesheets, training programmes, staff training records, goods received documentation, supplier accreditation records, complaints received and such other records as may be specified by the Authority from time to time) in relation to the Services.

9.3.2 Without prejudice to the generality of the foregoing, the Supplier shall maintain accurate records in accordance with the requirements of Schedule 8.4 (Records Provision) and provide prompt access (being no later than two (2) Working Days after receipt of the Authority's request) to such records to the Authority upon the Authority's request. The records and documents of the Supplier shall be available for inspection by the Authority and/or its nominee at any time and the Authority and/or its nominee may make copies of any such records and documents and shall comply with the requirements set out in Schedule 7.5 (Financial Reports and Audit Rights).

9.3.3 In addition to the requirements in Paragraphs 9.3.1 and 9.3.2, the Supplier shall provide to the Authority such supporting documentation as the Authority may reasonably require in order to verify the level of the performance of the Supplier both before and after each Operational Service Commencement Date and the calculations of the amount of Service Points and Service Credits for any specified period.

9.3.4 The Supplier shall ensure that the Performance Monitoring Report and any variations or amendments thereto which may be approved from time to time by the Authority, any reports and summaries produced in accordance with this Schedule and any other document or record reasonably required by the Authority are made available by the Supplier to the Authority additionally on-line at the location to be specified by the Authority and are capable of being printed, copied, extracted or further distributed by the Authority without restriction.

This document is based on Schedule 2.2 of the Crown Commercial Services Model Services Agreement v1.0 and has been adapted for use by the Emergency Services Mobile Communications Programme.

© Crown copyright

9.4 Performance Verification

9.4.1 The Authority reserves the right to verify the Services and the Supplier's performance and any information or reports of the Supplier as to the Supplier's performance under or in connection with this Agreement against the Performance Indicators, including by audit, independent survey or otherwise or by exercise of the Authority's rights under Schedule 7.5 (Financial Reports and Audit Rights).

9.5 External Competency Assessment

9.5.1 On or after each anniversary of the Effective Date or otherwise at any time provided the Authority has served not less than one (1) month's notice of its intent, the Authority may (at the Authority's expense) appoint an industry recognised independent body (as determined by the Authority) to assess the quality and effectiveness of the Personnel and Supplier's processes and organisation ("**External Competency Assessment**").

9.5.2 The Supplier shall at its sole cost fully cooperate with such External Competency Assessment, including by providing access to its premises and Personnel for the purposes of such assessment.

9.5.3 The Authority shall disclose the results of any External Competency Assessment to the Supplier. The Supplier shall, if directed by the Authority, at the Supplier's sole cost, comply with the Rectification Plan Process pursuant to Clause 27 of the Agreement for the purpose of rectifying any deficiencies identified by the Authority as a result of such External Competency Assessment.

9.6 Satisfaction Surveys

9.6.1 In order to assess the level of performance of the Supplier, the Authority may undertake or require the Supplier to undertake satisfaction surveys (in the form to be determined by the Authority) in respect of Users, various groups of Users or the Other ESN Suppliers, (each survey a "**Satisfaction Survey**") the results of which shall, if the Authority requests, be included in the Performance Monitoring Report. The subject matter of Satisfaction Surveys may include:

(a) the assessment of the Supplier's performance by the Users and the Other ESN Suppliers against the agreed Key Performance Indicators and the Subsidiary Performance Indicators and the Operating Level Agreement; and/or

(b) other suggestions for improvements to the Services.

9.7 The Supplier shall report in the Performance Monitoring Report any aspects of the Supplier's performance of the Services which the responses to the Satisfaction Surveys, as reasonably determined by the Authority, state or suggest that the Supplier is not meeting its obligations under the Services Description.

9.8 The Supplier shall agree with the Authority the frequency and level of sampling of Users for surveys to be conducted automatically as part of the Incident Management process. In the

This document is based on Schedule 2.2 of the Crown Commercial Services Model Services Agreement v1.0 and has been adapted for use by the Emergency Services Mobile Communications Programme.

© Crown copyright

event that the Supplier and the Authority are unable to agree the frequency and level of sampling of Users the Authority's decision shall be final. The Supplier shall collate the results of such survey and report trends and comments in the Performance Monitoring Report.

This document is based on Schedule 2.2 of the Crown Commercial Services Model Services Agreement v1.0 and has been adapted for use by the Emergency Services Mobile Communications Programme.

© Crown copyright

PART C: Performance Indicators

PART I: Performance Indicators for Availability, Response Times, Service Desk Response Times, Incident Handling and Incident Notification, Response and Fix Times

10 Availability

10.1 For the ESN Service Management System, IT Environment or any Services, it shall be considered available ("**Available**") when:

10.1.1 Users are able to access and utilise all the functions of such System, environment or Services; and

10.1.2 the Supplier is able to process the Authority Data and to provide any required reports within the timescales set out in the Services Description (as measured during the applicable Service Hours); and

10.1.3 the performance criteria set out in the definition of the applicable Availability KPI are met.

10.2 The percentage of Availability shall be measured for each Service as a percentage of the total time in a Service Period, in accordance with the formula in each applicable KPI or SPI which are of the general form:

Service Availability % = ((MP-SD)x100)/MP

where:

MP = total number of minutes or seconds, excluding any Permitted Maintenance, within the relevant Service Period during the Service Hours (or Operational Hours or Business Hours as applicable and as the case may be in respect of the relevant System, environment or Service); and

SD = total number of minutes or seconds, excluding any Permitted Maintenance, of where such System, environment or Services is not Available in the relevant Service Period.

10.3 For the avoidance of doubt, when calculating Availability pursuant to this Paragraph 10:

10.3.1 Periods of SD (being total number of minutes or seconds of non Availability) for any System, environment or Service (other than the ESN Self Service Interface) shall be subtracted from the total number of minutes or seconds (MP) or SD (Service Downtime) in the relevant Service Period for such System, environment or Service under Paragraph 10.2, where:

(a) such non Availability is directly caused by a failure of the ESN Self Service Interface; and

This document is based on Schedule 2.2 of the Crown Commercial Services Model Services Agreement v1.0 and has been adapted for use by the Emergency Services Mobile Communications Programme.

© Crown copyright

(b) such System, environment or Service relies on the Availability of the ESN Self Service Interface in order to be Available,

and,

10.3.2 except for any periods of maintenance undertaken by the Supplier which exceeds the time period agreed by the parties for such Permitted Maintenance for such System, environment or Service pursuant to Clause 7 (Permitted Maintenance), Service Downtime due to Permitted Maintenance carried out by the Supplier in accordance with Clause 7 (Permitted Maintenance) shall be subtracted from the total number of minutes or seconds (MP) in the relevant Service Period.

11 Response Times

Response Times for the Public Safety Communications Services and all other Services are as defined in the applicable KPIs and SPIs are set out in below.

12 Service Desk Response Times

12.1 Measurement of Supplier Service Desk response times will be based on the time taken for a Supplier Service Desk operative to answer a call. Calls receiving an automated response or placed into a queuing system shall be deemed not to have been answered.

12.2 The Supplier shall monitor the Supplier Service Desk response times and shall provide the results of such monitoring to the Authority as part of the Performance Monitoring Report in accordance with Paragraph 9.

13 Incident Handling

13.1 The Supplier shall operate an electronic system that shall track the status of all Service Incidents associated with the Services (the **"Incident Log"**).

13.2 The Supplier shall integrate its Incident Log with the ESN Service Management System (if this is separate) electronically such that any change in the Incident Log is replicated to the ESN Service Management System sufficiently rapidly (i.e. in near real time) so as to allow any applicable KPIs or SPIs to be met by any ESN Supplier and the Authority to track the Service Incident.

13.3 The Supplier shall allow that the Authority, User Organisations and Other ESN Suppliers may raise Service Incidents via the Supplier Service Desk via telephone, email, electronic binding of systems and/or the Self Service User Interface.

13.4 The Supplier shall allow that the Supplier's Solution may raise Service Incidents via automated means (e.g. electronic probes or software agents) or that the Supplier's own staff may raise Service Incidents.

13.5 The Supplier shall record any event identified as a Service Incident in the Incident Log. The time at which any Service Incident is raised with the Supplier shall be recorded in the Incident Log (the **"Incident Identification Time")** and this information synchronised with the ESN Service Management System (where separate).

This document is based on Schedule 2.2 of the Crown Commercial Services Model Services Agreement v1.0 and has been adapted for use by the Emergency Services Mobile Communications Programme.

© Crown copyright

~~*(a) If the Service Incident originates from a Service Desk call or within the Supplier's own Services, then this will be categorised and identified as a "**Type A Incident**" in the Incident Log and the time of origin shall be categorised as the **"Type A Incident Identification Time**".*~~
~~*(b) If the Service Incident originates from an Other ESN Supplier, then this will be categorised and identified as a "**Type B Incident**" in the Incident Log and the time at which the Other ESN Supplier notifies in writing or by telephone the Service Incident to the Supplier shall be the relevant time of the Incident and shall be categorised as the **"Type B Incident Identification Time**".*~~

13.6 The Supplier shall, for each Service Incident raised, investigate and diagnose the nature of each such Service Incident, including those which may require the support of Other ESN Suppliers. The Supplier shall update the Incident Log and where the resolution of the Service Incident requires the Supplier's action, that shall be recorded in the Incident Log and the ESN Service Management System (or such Other ESN Suppliers as appropriate) and the Supplier shall action or communicate such action requirement to such third parties as appropriate.

13.7 Upon completion of the investigation and the diagnosis of the Service Incident the Incident Log within the ESN Service Management System shall be updated by the Supplier with the following information:

(a) the Service Incident Identification Time in relation to that Service Incident;

(b) a unique Service Incident number;

(c) confirmation of the nature and severity of the Service Incident;

(d) a list of actions to investigate the Service Incident;

(e) identification of the party (Supplier or any Other ESN Suppliers) required to take action to resolve the Service Incident;

(f) the confirmed timeframe for the investigation and resolution and Initial Incident Investigation Conclusion Time;

(g) response Time; and

(h) fix Time.

The Supplier shall inform the Authority (and User Organisations and/or Other ESN Suppliers as applicable) of the outcome of the investigation of each Service Incident. The time at which these organisations are informed shall be recorded in the Incident Log (the **"Initial Incident Investigation Conclusion Time")** and this information synchronised with the ESN Service Management System (where separate). Should the Service Incident subsequently be returned as being inappropriately designated (e.g. sent to the wrong resolving party) it shall be re-investigated and diagnosed and the Initial Incident Investigation Conclusion Time updated to reflect the second and any subsequent time that the Service Incident is investigated (as per this Paragraph 13.8) until the Service Incident is resolved as described in Paragraph 14.2 below.

This document is based on Schedule 2.2 of the Crown Commercial Services Model Services Agreement v1.0 and has been adapted for use by the Emergency Services Mobile Communications Programme.

© Crown copyright

13.8 The Supplier shall, at a minimum, use the following methods for informing the Authority (and User Organisations and/or Other ESN Suppliers as applicable) of the outcome described in Paragraph **Error! Reference source not found.**:

13.8.1 for Severity One Service Incidents and Severity Two Service Incidents an SMS, a phone call and electronically including via the ESN Service Management System;

13.8.2 for Severity Three Service Incidents an SMS (for all operational service impacting Service Incidents as listed in 14.8.1) and electronically including via the ESN Service Management System;

13.8.3 for Severity Four Service Incidents and Severity Five Service Incidents electronically including via the ESN Service Management System.

14 Service Incident Identification Time, Response and Fix Times

14.1 The “Response Time” of a Service Incident is the period from the Service Incident Identification Time and the Incident Investigation Conclusion Time.

14.2 The “**Fix Time**” of a Service Incident is the period from the Initial Incident Investigation Conclusion Time to the point of its Resolution and “**Resolution**” means in relation to a Service Incident either:

14.2.1 the root cause of the Service Incident has been removed and the Services are being provided in accordance with the Services Description and Performance Indicators; or

14.2.2 the Authority has been provided with a workaround in relation to the Service Incident deemed acceptable by the Authority;

and the party raising the Incident, or the Authority acting on behalf of a User Organisation, is in agreement that the Incident may be closed, such agreement not to be unreasonably withheld.

14.3 Where a Severity One Service Incident or Severity Two Service Incident recurs despite being apparently resolved the Supplier shall re-open the original Service Incident and the Fix Time shall be re-started to include all the time the Incident is subsequently worked on. Whether or not an Incident has recurred shall be initially determined by the Authority, acting reasonably, and may include situations where:

14.3.1 A process cannot be comprehensively re-tested as it is an occasional event, e.g. an overnight batch run or an end of month reconciliation of information; and / or

14.3.2 A Service which was not Available is returned to operational status then subsequently fails in a short space of time.

14.4 The Supplier may subsequently prove by problem management (e.g. root cause analysis) that such a situation was two separate Service Incidents accidentally conflated in which case they shall be treated as two separate Service Incidents provided that the Supplier has notified the Authority within one (1) Working Day of becoming aware of such accidental conflation and such time is within thirty (30) days after the date upon which the first of the Service Incidents

This document is based on Schedule 2.2 of the Crown Commercial Services Model Services Agreement v1.0 and has been adapted for use by the Emergency Services Mobile Communications Programme.

© Crown copyright

originated and the Supplier obtained the Authority's approval in writing to such separation of Service Incidents.

14.5 Worked example:

The ESN Self Service Interface is no longer Available. Two hours later it is restored to full functionality after a patch is applied to some routers in the Supplier Solution. The Fix Time is two (2) hours. Ten minutes after a volume of User Organisations resume their use of the Self Service User Interface the Service again is no longer Available. Further investigation reveals another patch is required to the routers and this takes a further two hours to resolve. The Fix Time is now four (4) hours and there is only one (1) Service Incident.

On later problem analysis, it is identified that the first patch did resolve the original incident and the subsequent failure was as a result of that patch causing a separate aspect of the Supplier Solution to fail and it is that separate aspect that was required to be fixed. The Supplier may request that the two events are now treated as two (2) separate Service Incidents and each has a Fix Time of two (2) hours. The Authority shall not unreasonably refuse to agree to such a re-apportioning of Service Incidents.

14.6 Fix Times for Severity Three Service Incidents, Severity Four Service Incidents and Severity Five Service Incidents shall be measured in Business Hours.

14.6.1 Worked example for Severity Three Service Incidents, Severity Four Service Incidents and Severity Five Service Incidents:

(a) As Business Hours are 0800-1800, then the clock stops measuring Fix Time at 1800 in the evening and restarts at 0800 the following day.

(b) As weekend and Public Holidays are excluded from Business Hours, then the following day shall be the following Working Day, i.e. across Easter Weekend the clock stops at 1800 on Maundy Thursday and restarts at 0800 on the Tuesday immediately following Easter Monday.

14.7 Fix Times for Severity One Service Incidents and Severity Two Service Incidents shall be measured 24x7 regardless of the Service Hours of the impacted Service(s).

14.8 The Supplier shall measure Incident Identification Times, Initial Incident Investigation Conclusion Times, Response Times and Fix Times as part of its service management responsibilities and report its performance to the Authority on Response Times and Fix Times as part of the Performance Monitoring Report.

14.8.1 For the purposes of this Schedule, the following expressions shall have the following meanings:

Definition	Meaning
“Service Incident”	a reported occurrence of a failure to deliver any part of the Services in accordance with the Authority Requirements or the Performance Indicators or any other unplanned interruption to the ESN Service

This document is based on Schedule 2.2 of the Crown Commercial Services Model Services Agreement v1.0 and has been adapted for use by the Emergency Services Mobile Communications Programme.

© Crown copyright

Definition	Meaning
	Management System, the IT Environment or Service or a reduction in the quality of any such item or any other failure of any such item;
"Severity One Service Incident"	a Service Incident which, in the reasonable opinion of the Authority: (a) has a significant adverse (critical) impact on the ability of an Emergency Service to carry out its duties; (b) constitutes a loss of the Service which prevents a significant number of Users or User Organisations (as determined by the Authority) from working; (c) has a critical (as determined by the Authority) impact on the activities of the Authority; (d) causes significant financial loss and/or disruption to the Authority; or (e) results in any material loss or corruption of Authority Data; Non-exhaustive examples: […. ✂ ….]
"Severity Two Service Incident"	a Service Incident which, in the reasonable opinion of the Authority has the potential to: (a) have a major (but not critical) adverse impact on the ability of an Emergency Service to carry out its duties; (b) have a major (but not critical) adverse impact on the activities of the Authority and no workaround acceptable to the Authority is available; or (c) cause a financial loss and/or disruption to the Authority which is more than trivial but less severe than the significant financial loss described in the definition of a Severity One Service Incident; Non-exhaustive examples: […. ✂ ….]
“Severity Three Service Incident”	a Service Incident which, in the reasonable opinion of the Authority has the potential to: (a) have a moderate adverse impact on the ability of an Emergency Service to carry out its duties; (b) have a major adverse impact on the activities of the Authority which can be reduced to a moderate adverse impact due to the availability of an workaround acceptable to the Authority; or

This document is based on Schedule 2.2 of the Crown Commercial Services Model Services Agreement v1.0 and has been adapted for use by the Emergency Services Mobile Communications Programme.

© Crown copyright

Definition	Meaning
	(c) have a moderate adverse impact on the activities of the Authority; Non-exhaustive examples: […. ✂ ….]
"Severity Four Service Incident"	a Service Incident which, in the reasonable opinion of the Authority has the potential to have a minor adverse impact on the provision of the Services to Users or a minor adverse impact on the ability of an Emergency Service to carry out its duties. […. ✂ ….]
"Severity Five Service Incident"	a Service Incident comprising a flaw which is cosmetic and, as such, does not undermine the User's confidence in the information being displayed or one which has a minimal adverse impact on the ability of an Emergency Service to carry out its duties; Non-exhaustive examples: […. ✂ ….]

14.9 The Minimum Service Thresholds for Incident Response Time and Incident Fix Time shall be as below:

Service Incident Severity	Incident Response Time	Fix Time
Severity One Service Incident (including MS Supplier core network faults)	[…. ✂ ….]	
Severity One Service Incident for MS Supplier RAN and Interface Faults		
Severity Two Service Incident		
Severity Three Service Incident		
Severity Four Service Incident		
Severity Five Service Incident		

14.10 For Severity Five Incidents, the Service Incident may be treated as Fixed if the Parties agree that the Fix in question can be rolled-up into a scheduled release.

14.11 The Supplier shall, upon request by the Authority acting reasonably, re-classify any Service Incident to a new Service Incident Severity based on the operational needs of the Authority or

This document is based on Schedule 2.2 of the Crown Commercial Services Model Services Agreement v1.0 and has been adapted for use by the Emergency Services Mobile Communications Programme.

© Crown copyright

User Organisations. Where a Service Incident has been re-classified, it will in all regards (including Incident Fix Time and treatment under Performance Indicators) be treated as any other Service Incident of that Incident Severity. The Supplier shall follow the following process for re-classification of Service Incidents:

14.11.1 Chiefs from each User Organisation will be entitled to request re-classification of any Service Incident to a new Service Incident Severity;

14.11.2 The Authority will collate and provide a list of Users in Chief roles to the Supplier, and provide an updated list of Chiefs every 3 months as a minimum;

14.11.3 In the event that a Service Incident requires re-classification in response to an operational incident, the Chief will make the request to re-classify a Service Incident by contacting the Supplier Service Desk using telephone, email, text message or via the ESN Service Management System. The Chief will provide details of the Service Incident, including:

(a) the Service Incident reference;

(b) current Service Incident Severity; and

(c) the requested Service Incident Severity.

14.11.4 The Supplier shall authenticate the communication from the Chief before accepting the request. In the event that the Supplier cannot authenticate the request, the Supplier shall contact the Authority to request authentication;

14.11.5 Where required, the Supplier shall pass the request for re-classification to the Other ESN Supplier along with details of the Chief making the request via the ESN Service Management System and also by telephone;

14.11.6 The Supplier shall update the Service Incident record with details of the request, and actions taken to meet the request.

14.11.7 The Supplier shall inform the Authority of the request for re-classification

14.12 With respect of any Service Incident re-classified under Paragraph 14.11 above, the Fix Time shall be determined from the point in time at which the Service Incident is re-classified (in effect closing the original Incident and raising a new Incident).

Example:

At 16:00 on the Thursday before Easter weekend a Service Incident is reported that means a particular Control Room is unable to access the Service Management System. This would normally be a Severity Three Service Incident and require a Fix Time of 10 hours during the Business Hours for a Working Day which would be at the near the end of the Tuesday following Easter Monday. Due to operational priorities this is elevated by the Authority to a Severity Two Service Incident at 17:15. This now requires an immediate Fix Time of 6 hours meaning that it must be resolved by 23:15 i.e. before Good Friday commences.

This document is based on Schedule 2.2 of the Crown Commercial Services Model Services Agreement v1.0 and has been adapted for use by the Emergency Services Mobile Communications Programme.

© Crown copyright

14.13 The Parties may agree other appropriate treatment on a case by case basis and will document any particular agreement in (at a minimum) the ESN Service Management System.

15 Variation as a result of 3GPP related standards

15.1 Where, as a result of variations relating to 3GPP standards, the Supplier notifies the Authority that changes are required to this Schedule, such change shall be agreed and implemented in accordance with the Change Control Procedure.

15.2 The Supplier shall, where requested by the Authority (or where requested by the Supplier, as agreed with the Authority), provide the necessary contributions to the relevant working groups to encourage the adoption of features and/or performance measures into 3GPP standards.

16 Permissible Delays

16.1 The following table applies for USP1, USP2, USP3, USP4 and USP5 only. The stated maximum delays are the period of permissible delay for the appropriate Performance Indictor and the appropriate Network Element (each as identified below) which, if the delay is exceeded (provided such delay is not as a result of the fault of the Supplier and, where related to User Devices, the Supplier shall ensure that the Maximum Delay has been specified in the Kodiak Device Requirement Specification for use in relation to ESN Prime) shall not be counted towards the relevant target time for the relevant performance indicator:

Event	Maximum Delay (msec)	Applicable Performance Indicator	Network Element
Notification of PTT key press event to the PTT application	20	USP2, USP3, USP4	User Device
Delay between receipt of a signalling message on the User Device (Radio Layer) to the delivery of the same message to the PTT application	20	USP2, USP3, USP4, USP5	User Device
Audio playout and recording latency	20	USP1, USP4	User Device
Audio frame latency (duration)	20	USP1	User Device
Jitter Buffer (2 frames)	40	USP1	User Device
Media Bearer Establishment latency (PCRF + Core + User Device)	120	USP3, USP4	RAN, PCRF, Core (MS Supplier), Core (US Supplier), User Device
Network Latency QCI 69	60	USP2, USP3, USP4, USP5	RAN,PGW

This document is based on Schedule 2.2 of the Crown Commercial Services Model Services Agreement v1.0 and has been adapted for use by the Emergency Services Mobile Communications Programme.

© Crown copyright

Network Latency QCI 65	75	USP1, USP4	RAN,PGW
User Equipment (as defined by 3GPP) Idle Mode DRX cycle	320	USP3, USP5	RAN

16A Speech Delay for Control Room Interface

The maximum speech delay in Voice Services when one of the calling or called parties is using a Control Room System is 205 ms. This is defined as the time from transmission of speech from the microphone of the transmitting User Device or from the transmitting Control Room Interface (as appropriate) to the receipt at the loudspeaker (or headphones / earphones) of the receiving User Device or at the receiving Control Room Interface (as appropriate). For avoidance of doubt, the timeline excludes any processing delays in the Control Room System or in transiting Authority networks.

16B Group Call Setup Time for Control Room Interface

The maximum Group Call Setup Time where the Called Party is using a Control Room System is 300 ms. This is defined as the time from when the PTT key (or equivalent user interface feature) is activated and the call setup request is received at the Control Room Interface for onward transmission to the Control Room System.

This document is based on Schedule 2.2 of the Crown Commercial Services Model Services Agreement v1.0 and has been adapted for use by the Emergency Services Mobile Communications Programme.

© Crown copyright

PART C: Performance Indicators

PART II: Other Performance Indicators

In addition to the Part I Performance Indicators, the Supplier must perform it obligations to the Performance Indicators set out in each table below (categorised according to KPIs and SPIs).

17 Overview of KPIs and SPIs

Paragraphs 18 to 24 below provide an overview of the KPIs and SPIs that apply to the Services that are more particularly described and detailed in the tables which follow in Paragraph 25.

18 Systems Integration

18.1 Acting as Service Integrator

The Supplier shall be tracked against the Milestones in the Implementation Plan.

18.2 Reference Test Facilities

Ref	Title	Type
USA12	Reference Test Facility Availability	SPI

19 Network and IT Infrastructure

Network and IT components of the Supplier Solution will not specifically be measured unless it is necessary to do so to ensure compliance of the Services with the KPIs and SPIs set out in Paragraphs 20 to 22 inclusive.

20 Public Safety Communications

Ref	Title	Type
USA1	Public Safety Communications Service Availability	KPI
USP1	Speech Delay	KPI
USP2	Group Call Setup Time	KPI
USP3	One-to-one Call Initial Setup Time	KPI
USP4	Late Call Entry Time	KPI
USP5	Messaging Delivery Times	KPI
USA7	PSCS Administration Service	KPI

This document is based on Schedule 2.2 of the Crown Commercial Services Model Services Agreement v1.0 and has been adapted for use by the Emergency Services Mobile Communications Programme.

© Crown copyright

21 User Device Management

21.1 Provision of Technical Specifications

The Supplier shall be tracked against the Milestones in the Implementation Plan.

21.2 Network Approval Testing

Ref	Title	Type
USP10	Application Approval Testing Efficiency	SPI
USP11	User Device Approval Testing Efficiency	SPI

21.3 Device Management Service

Ref	Title	Type
USA5	User Device Management Service Availability	KPI

21.4 Not Used

22 Customer Support

22.1 Billing and Payment

Ref	Title	Type
USA6	Billing and Payment Service Availability	KPI
USP6	Billing Solution Accuracy	SPI
USP7	Billing Solution On Time Billing	SPI
USP8	Billing Solution Collections Process Efficiency	SPI

22.2 Reporting Application

Ref	Title	Type
USA8	Reporting Application Availability	SPI

This document is based on Schedule 2.2 of the Crown Commercial Services Model Services Agreement v1.0 and has been adapted for use by the Emergency Services Mobile Communications Programme.

© Crown copyright

22.3 Data Processing and Subscription Management

Ref	Title	Type
USA9	Data Processing and Transfer Service Availability	SPI
USA10	Subscription Provisioning and Management Service Availability	SPI

22.4 Voice and Data Traffic Recording

Ref	Title	Type
USA11	Optional Voice and Data Traffic Recording Service Availability	KPI

22.5 ESN Self-Service Interface

Ref	Title	Type
USA4	ESN Self Service Interface Availability	KPI

22.6 ID Management Service for Users

There are no Performance Indicators for this Service.

23 Service Management

Ref	Title	Type
USS1	Severity One Service Incident Response Time	KPI
USS2	Severity Two and Three Service Incident Response Time	SPI
USS3	Severity Four and Five Service Incident Response Time	SPI
USS4	Severity One Service Incident Fix Time	KPI
USS5	Severity Two and Three Service Incident Fix Time	KPI
USS6	Severity Four and Five Service Incident Fix Time	SPI
USS7	Key Documents Delivered On Time	SPI
USS8	Call Answer Time	KPI

This document is based on Schedule 2.2 of the Crown Commercial Services Model Services Agreement v1.0 and has been adapted for use by the Emergency Services Mobile Communications Programme.

© Crown copyright

Ref	Title	Type
USS9	Calls Abandoned	SPI
USS10	Change Request Impact Assessments Efficiency	SPI
USS11	Late Notice Change Requests	SPI
USR1	Recovery Time Objective (Priority One Services)	KPI
USR2	Recovery Point Objective (Priority One Services)	KPI
USR3	Recovery Time Objective (Priority Two Services)	KPI
USR4	Recovery Point Objective (Priority Two Services)	KPI
USR5	Recovery Time Objective (Priority Three Services)	SPI
USR6	Recovery Point Objective (Priority Three Services)	SPI

23.1 Manage the Services end-to-end

Ref	Title	Type
USA3	ESN Service Management System Availability	SPI

23.2 User Service Requests

Ref	Title	Type
USS12	Service Request Fulfilment Efficiency	SPI

24 Commercial Management

Ref	Title	Type
USC1	Continued Commercial Compliance	KPI

This document is based on Schedule 2.2 of the Crown Commercial Services Model Services Agreement v1.0 and has been adapted for use by the Emergency Services Mobile Communications Programme.

© Crown copyright

25 Details of KPIs and SPIs

The following sets out the detail of each Performance Indicator, its definition, description, method of calculation, Service Period, Minimum Service Thresholds and applicable Service Points:

25.1.1 Public Safety Communications Service Availability

Public Safety Communications Service Availability	***KPI***	***USA1***

Definition

This measures the Availability of the Public Safety Communications Service.

The KPI refers to the Availability of the Services as delivered by the Supplier Solution, measured up to the points of interconnection with Other ESN Suppliers, the Authority or User Organisations as appropriate. For avoidance of doubt, faults in the User Client which lead to Users being unable to access the Services shall be included in the measurement of Availability.

For the purposes of paragraph 10.1(c) above, to the extent that a large number of Users (as agreed in the applicable design document) are impacted by Incidents (other than Incidents which the Supplier can evidence, in accordance with the Service Management Framework processes set out in the Service Level Management and Availability Management documents), are as a result of an act or omission of an Other Supplier) then the Service shall be deemed Unavailable.

Calculation

The Availability of the Public Safety Communications Service shall be calculated as a proportion of total potential Availability in the Service Period, taking into account the proportion of Users who are logged on to the Public Safety Communications Service who are affected by un-Availability.
Availability for the Service Period shall be calculated by reference to all faults or maintenance activities which impact Availability using the formula in paragraph 10.2 with SD and MP defined as:

$$MP = \text{seconds in measurement period}$$

$$SD = \sum_{\substack{\text{all faults} \\ \text{and maintenance in period}}} \text{duration (seconds)} \times \text{proportion of logged on Users affected}$$

Measurement

Service Period	Monthly
Reporting Method	The KPI will be reported through the ESN Service Management System

This document is based on Schedule 2.2 of the Crown Commercial Services Model Services Agreement v1.0 and has been adapted for use by the Emergency Services Mobile Communications Programme.

© Crown copyright

Service Hours	Operational Hours	**Permitted Maintenance**	Tier One Service

Levels mapped to measurement

Severity	Lower Bound % of each Public Safety Communications Service Availability Within Service Period	Upper Bound % of each Public Safety Communications Service Availability Within Service Period	Service Points
Minimum Service Threshold	[….✂….]		
Minor KPI Failure			
Serious KPI Failure			
Severe KPI Failure			
KPI Service Threshold			
Weighting Factor		**100%**	

This document is based on Schedule 2.2 of the Crown Commercial Services Model Services Agreement v1.0 and has been adapted for use by the Emergency Services Mobile Communications Programme.

© Crown copyright

25.1.2 Speech Delay

Speech Delay	***KPI***	***USP1***

Definition

This measures the time between an utterance by the transmitting User Device, and the playback of the utterance at the receiving User Device's speaker in accordance with 3GPP MCPTT KPI3 as specified in TS 22.179[R-6.15.3.2-015].

USP1 shall be less than 300 msec for voice bursts.

Each MCPTT Call can have multiple such voice bursts; any of which can be considered in the measurement of this KPI.

For avoidance of doubt, the timeline below excludes any processing delays in the Control Room System or in transiting Authority networks. In addition, exception cases (i.e. Satellite Backhaul, Gateway Device Backhaul, WiFi .) shall be excluded from KPI assessment.

The KPI only applies when User Devices are in coverage of, and attached to, the MS Network over a 4G connection.

KPI Capture Points

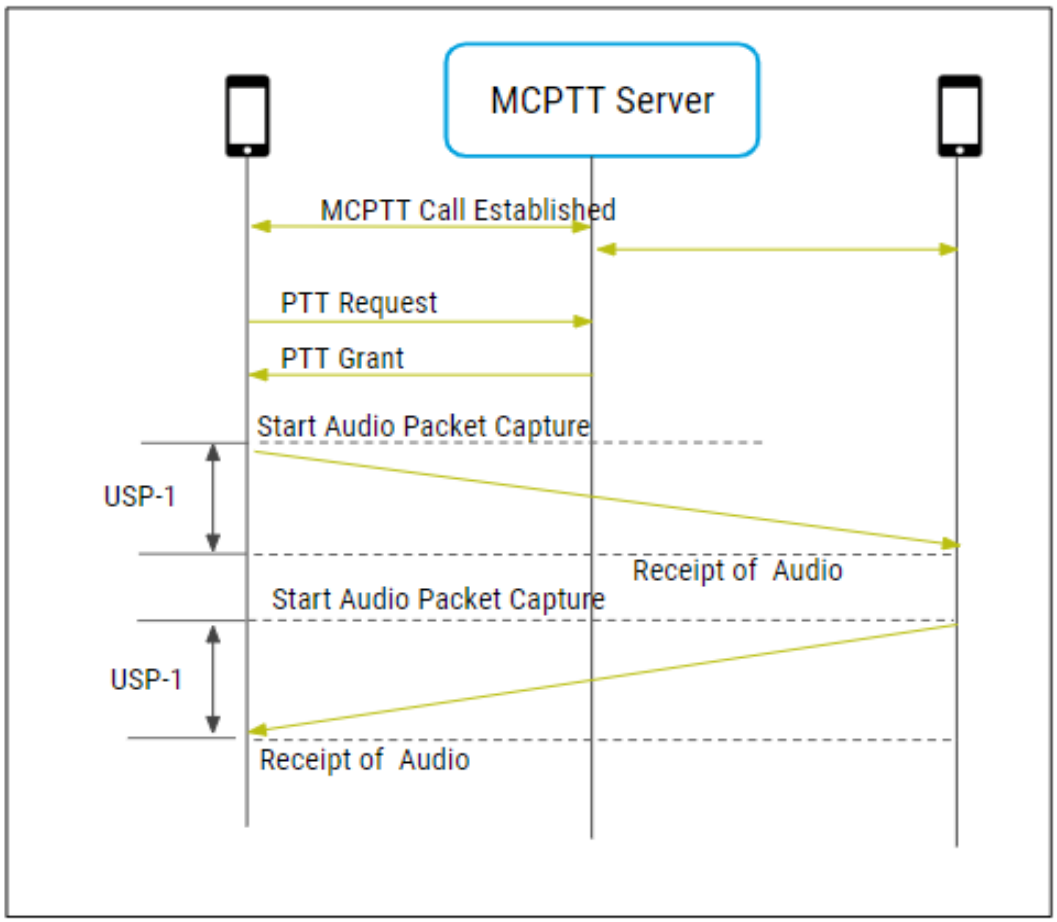

This document is based on Schedule 2.2 of the Crown Commercial Services Model Services Agreement v1.0 and has been adapted for use by the Emergency Services Mobile Communications Programme.

© Crown copyright

Calculation

The proportion of voice bursts experiencing delay in speech of less than or equal to the Maximum Delay as a percentage of total voice bursts made and received during the Service Period will be calculated as:

$$100 * \left(\frac{\sum Voice\ bursts\ with\ a\ speech\ delay\ of < the\ applicable\ Maximum\ Delay\ in\ the\ Service\ Period}{\sum Voice\ bursts\ in\ the\ Service\ Period}\right)$$

Whilst continuous performance monitoring of all associated elements of a KPI is the ideal situation, it is recognised that this may not be feasible, may have a negative impact on the User experience or indeed the KPI itself may be affected by the measurement overhead.

The Supplier is required to propose a reliable and proportionate methodology for monitoring for performance against this KPI, and agree this with the Authority in the detailed design phase.

Where a sampling type regime is proposed, then, where practical, continuous measurement of an alternative parameter that reflects the real time performance of the KPI should be included.

Measurement

Service Period	Monthly		
Reporting Method	The KPI is to be reported by the Supplier's Speech Delay Assurance Solution		
Service Hours	Operational Hours	**Permitted Maintenance**	Tier One Service

Levels mapped to measurement

Severity	Lower Bound % of Voice calls with Speech Delay less than or equal to the Maximum Delay Within Service Period	Upper Bound % of Voice calls with Speech Delay less than or equal to the Maximum Delay Within Service Period	Service Points
Minimum Service Threshold	[….✂….]		
Minor KPI Failure			
Serious KPI Failure			
Severe KPI Failure			
KPI Service Threshold			
Weighting Factor		**100%**	

This document is based on Schedule 2.2 of the Crown Commercial Services Model Services Agreement v1.0 and has been adapted for use by the Emergency Services Mobile Communications Programme.

© Crown copyright

25.1.3 Group Call Set Up Time

This document is based on Schedule 2.2 of the Crown Commercial Services Model Services Agreement v1.0 and has been adapted for use by the Emergency Services Mobile Communications Programme.

© Crown copyright

Group Call Set Up Time	***KPI***	***USP2***

Definition

This measures the percentage of Group Call communications set up within a specified number of milliseconds (the "**Group Call Setup Time**").

The Group Call Setup Time is defined as the time between when a calling User requests to speak (normally by pressing the PTT control on the User Device) and when this calling User gets a signal to start speaking in accordance with KPI1 as specified in 3GPP TS 22.179 [R-6.15.3.2-012] and [R-6.15.3.2-013] .

Type A) non-Emergency Distress Communications voice Group Calls: non-Emergency Distress Communications voice Group Calls must be setup within 300 msec.

Type B) Emergency Distress Communications voice Group Calls: Emergency Distress Communications voice Group Calls must be setup within 300 msec.

For avoidance of doubt, the timeline below excludes any processing delays in the Control Room System or in transiting Authority networks. In addition, exception cases (being Satellite Backhaul, Gateway Device Backhaul WiFi only) shall be excluded from KPI assessment.

The KPI only applies when User Devices are in coverage of, and attached to, the MS Network over a 4G connection.

KPI Capture Points

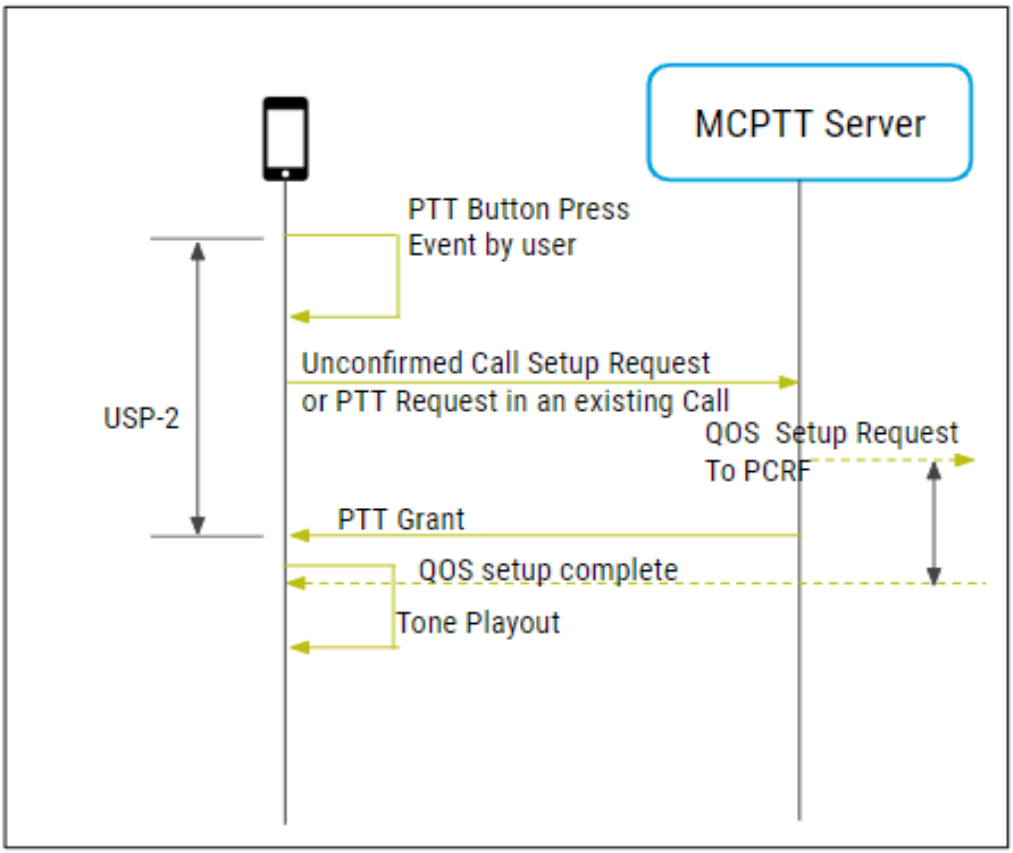

This document is based on Schedule 2.2 of the Crown Commercial Services Model Services Agreement v1.0 and has been adapted for use by the Emergency Services Mobile Communications Programme.

© Crown copyright

Calculation

The proportion of Group Calls set up within the applicable Group Call Setup Time as a percentage of total Group Calls made and received during the Service Period will be calculated as:

$$100 * \left(\frac{\sum Group\ Calls\ set\ up\ within\ the\ applicable\ Group\ Call\ Setup\ Time}{\sum Group\ Calls\ set\ up\ in\ the\ Service\ Period} \right)$$

Whilst continuous performance monitoring of all associated elements of a KPI is the ideal situation, it is recognised that this may not be feasible, may have a negative impact on the User experience or indeed the KPI itself may be affected by the measurement overhead.

The Supplier is required to propose a reliable and proportionate methodology for monitoring for performance against this KPI, and agree this with the Authority in the detailed design phase.

Where a sampling type regime is proposed, then, where practical, continuous measurement of an alternative parameter that reflects the real time performance of the KPI should be included.

Measurement

Service Period	Monthly		
Reporting Method	The KPI will be reported by the Response Time Assurance Solution		
Service Hours	Operational Hours	**Permitted Maintenance**	Tier One Service

Levels mapped to measurement

Severity	Target time (ms)	% of Group Calls set up within or equal to Target time Within Service Period	Service Points
Minimum Service Threshold	[…. ✂ ….]		
Minor KPI Failure			
Serious KPI Failure			
Severe KPI Failure			
KPI Service Threshold			
Weighting Factor		**100%**	

This document is based on Schedule 2.2 of the Crown Commercial Services Model Services Agreement v1.0 and has been adapted for use by the Emergency Services Mobile Communications Programme.

© Crown copyright

This document is based on Schedule 2.2 of the Crown Commercial Services Model Services Agreement v1.0 and has been adapted for use by the Emergency Services Mobile Communications Programme.

© Crown copyright

25.1.4 One-to-one Call Initial Setup Time

One-to-one Call Initial Setup Time	***KPI***	***USP3***

Definition

This measures in milliseconds the percentage of One-to-One Calls set up (the "**One-to-One Call Initial Set Up Time**") from initial call from the initiating calling party to confirmation received by that calling party that the called party has received an alert, taking into account any User Device power saving modes. The maximum set up is 1 second (1000 ms) ("**Maximum One-to-One Call Initial Set Up Time**").

For avoidance of doubt, the timeline below excludes any processing delays in the Control Room System or in transiting Authority networks. In addition, exception cases (i.e. Satellite Backhaul, Gateway Device Backhaul, WiFi) shall be excluded from KPI assessment.

The KPI only applies when User Devices are in coverage of, and attached to, the MS Network over a 4G connection.

KPI Capture Points

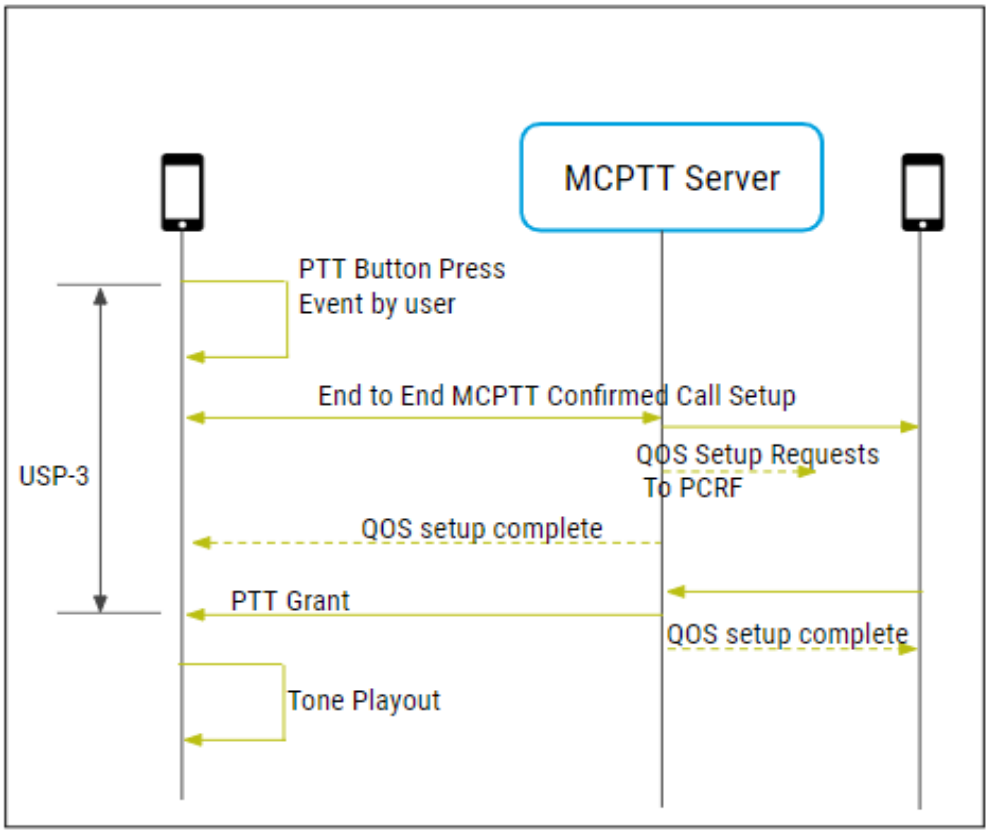

This document is based on Schedule 2.2 of the Crown Commercial Services Model Services Agreement v1.0 and has been adapted for use by the Emergency Services Mobile Communications Programme.

© Crown copyright

Calculation

The One-to-One Call Initial Set Up Time shall be calculated using the Response Time Assurance Solution

The proportion of One-to-One Calls initially set up in the One-to-One Call Initial Set Up Time as a percentage of total One-to-One Calls initially set up during the Service Period will be calculated in milliseconds as follows:

$$100 * \left(\frac{\sum OnetoOne\ Calls\ with\ initial\ setup\ within\ the\ Maximum\ OnetoOne\ Call\ Initial\ Set\ Up\ Time}{\sum OnetoOne\ Calls\ set\ up\ in\ the\ Service\ Period} \right)$$

Whilst continuous performance monitoring of all associated elements of a KPI is the ideal situation, it is recognised that this may not be feasible, may have a negative impact on the User experience or indeed the KPI itself may be affected by the measurement overhead.

The Supplier is required to propose a reliable and proportionate methodology for monitoring for performance against this KPI, and agree this with the Authority in the detailed design phase.

Where a sampling type regime is proposed, then, where practical, continuous measurement of an alternative parameter that reflects the real time performance of the KPI should be included.

Measurement

Service Period	Monthly		
Reporting Method	The KPI will be reported by the Response Time Assurance Solution		
Service Hours	Operational Hours	**Permitted Maintenance**	Tier One Service

Levels mapped to measurement

Severity	Lower Bound % of One-to-One Calls initial set up within or equal to One-to-One Call Initial Set Up Time Within Service Period	Upper Bound % of One-to-One Calls initial set up within or equal to One-to-One Call Initial Set Up Time Within Service Period	Service Points
Minimum Service Threshold	[…. ✂ ….]		
Minor KPI Failure			

This document is based on Schedule 2.2 of the Crown Commercial Services Model Services Agreement v1.0 and has been adapted for use by the Emergency Services Mobile Communications Programme.

© Crown copyright

Serious KPI Failure			
Severe KPI Failure			
KPI Service Threshold			
Weighting Factor		**100%**	

This document is based on Schedule 2.2 of the Crown Commercial Services Model Services Agreement v1.0 and has been adapted for use by the Emergency Services Mobile Communications Programme.

© Crown copyright

25.1.5 Late Call Entry Time

Late Call Entry Time	***KPI***	***USP4***

Definition

Late call entry is the activity when an affiliated PTT group member joins an ongoing voice Group Call.

The time to enter an ongoing voce Group Call is measured from the time that a User decides to monitor such a voice Group Call to the time when the User Device's speaker starts to play the audio.

Late call entry is measured in accordance with 3GPP KPI 4 as defined in 3GPP TS 22.179 [R-6.15.4.2-005] but with an additional allowance of 150 ms to allow for media playout in the User Device. This results in a Maximum Late Call Entry Time for USP4 of 500 ms.

For avoidance of doubt, the timeline above excludes any processing delays in the Control Room System or in transiting Authority networks. In addition, exception cases (i.e Satellite Backhaul, Gateway Device Backhaul, WiFi) shall be excluded from KPI assessment.

The KPI only applies when User Devices are in coverage of, and attached to, the MS Network over a 4G connection.

KPI Capture Points

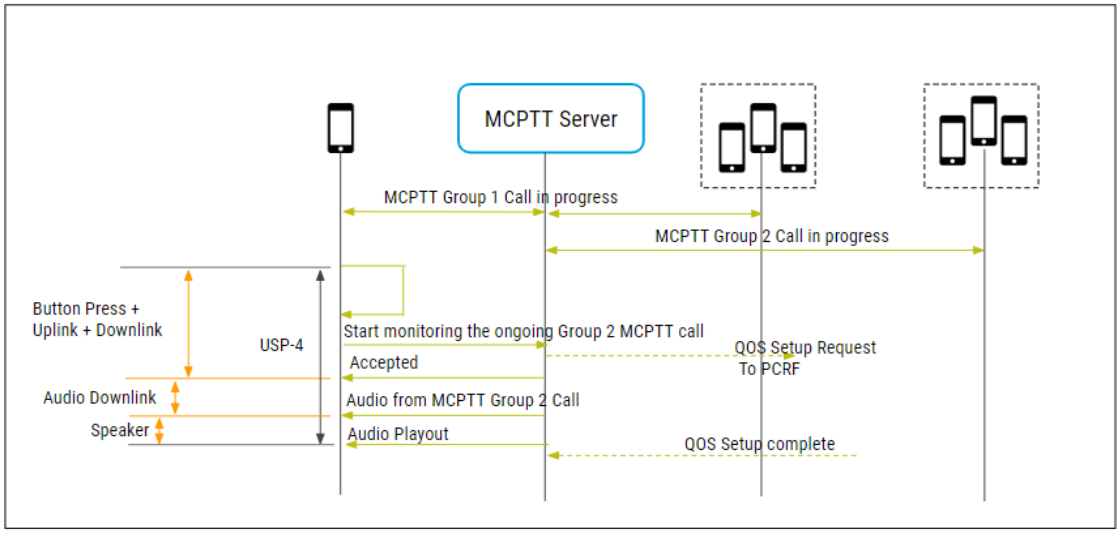

This document is based on Schedule 2.2 of the Crown Commercial Services Model Services Agreement v1.0 and has been adapted for use by the Emergency Services Mobile Communications Programme.

© Crown copyright

Calculation

The proportion of Late Call Entry requests set up within the applicable Maximum Late Call Entry Time *as a percentage of total Late Entry requests made during the Service Period will be calculated as:*

$$100 * \left(\frac{\sum Late\ Call\ Entry\ requests\ set\ up\ within\ the\ applicable\ MaximumLate\ Call\ Entry\ Time}{\sum Late\ Call\ Entry\ requests\ set\ up\ in\ the\ Service\ Period} \right)$$

Whilst continuous performance monitoring of all associated elements of a KPI is the ideal situation, it is recognised that this may not be feasible and may have a negative impact on the User experience.

The Supplier is required to propose a reliable and proportionate methodology for monitoring for performance against this KPI, and agree this with the Authority in the detailed design phase.

Where a sampling type regime is proposed, then, where practical, continuous measurement of an alternative parameter that reflects the real time performance of the KPI should be included.

Measurement

Service Period	Monthly		
Reporting Method	The KPI will be reported by the Response Time Assurance Solution		
Service Hours	Operational Hours	**Permitted Maintenance**	Tier One Service

Levels mapped to measurement

Severity	Target time (ms)	% of Late Call Entry Set Up Time Within Service Period	Service Points
Minimum Service Threshold	[…. ✂ ….]		
Minor KPI Failure			
Serious KPI Failure			
Severe KPI Failure			
KPI Service Threshold			
Weighting Factor		**100%**	

This document is based on Schedule 2.2 of the Crown Commercial Services Model Services Agreement v1.0 and has been adapted for use by the Emergency Services Mobile Communications Programme.

© Crown copyright

25.1.6 Messaging Delivery Times

Messaging Delivery Times	***KPI***	***USP5***

Definition

This measures the proportion of messages sent via the Messaging Service which are delivered (the "**Messaging Delivery Time**") *within 2.5 seconds (the "**Maximum Messaging Delivery Time**")as measured from initial sending of the message by the initiating User to the initiating User receiving acknowledgement that the message was delivered to the receiving party* taking into account any User Device power saving modes.

This KPI only applies to the Secure Text Messaging service that is used to exchange One-to-One addressed text messages without attachments.

For avoidance of doubt, the timeline below excludes any processing delays in the Control Room System or in transiting Authority networks. In addition, exception cases (i.e. Satellite Backhaul, Gateway Device Backhaul, WiFi) shall be excluded from KPI assessment.

The KPI only applies when User Devices are in coverage of, and attached to, the MS Network over a 4G connection. Also the User must be logged into the Messaging application.

KPI Measurement Points

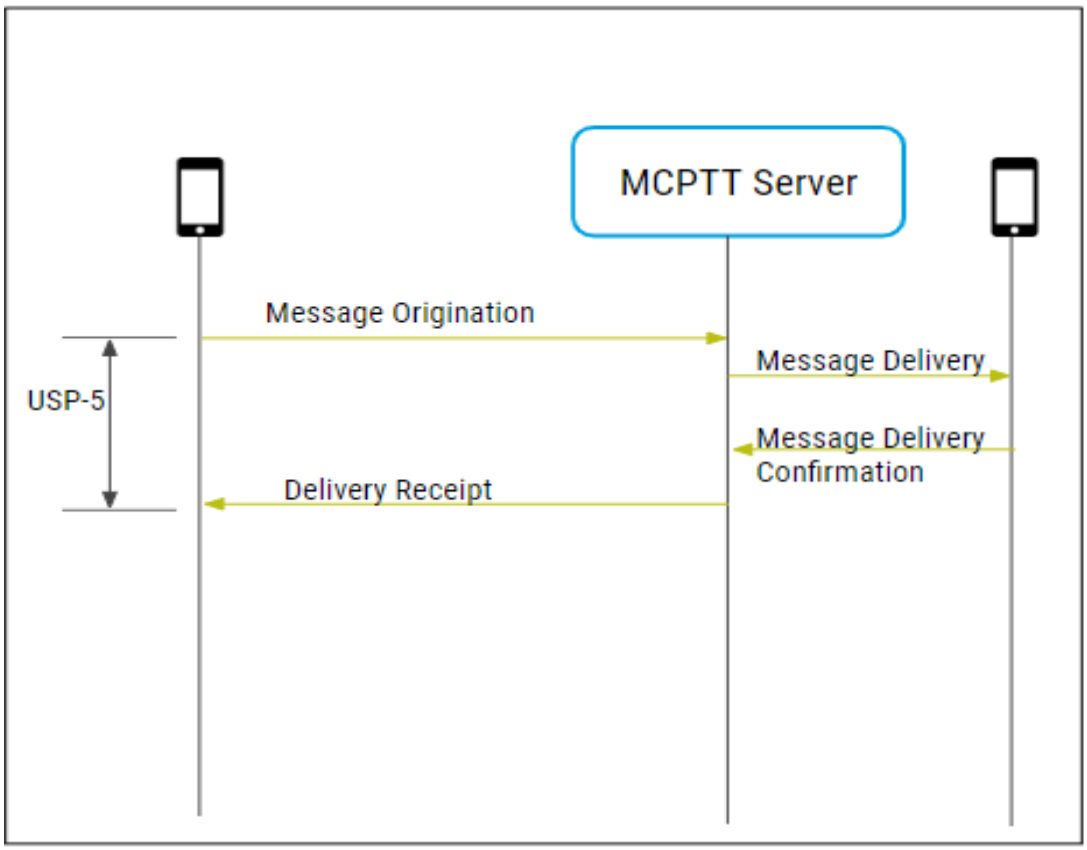

This document is based on Schedule 2.2 of the Crown Commercial Services Model Services Agreement v1.0 and has been adapted for use by the Emergency Services Mobile Communications Programme.

© Crown copyright

Calculation

The Messaging Delivery Time shall be measured as follows:

$$100 * \left(\frac{\sum Messages\ delivered\ within\ the\ Maximum\ Messaging\ Delivery\ Time}{\sum Messages\ transmitted\ in\ the\ Service\ Period} \right)$$

Whilst continuous performance monitoring of all associated elements of a KPI is the ideal situation, it is recognised that this may not be feasible, may have a negative impact on the User experience or indeed the KPI itself may be affected by the measurement overhead.

The Supplier is required to propose a reliable and proportionate methodology for monitoring for performance against this KPI, and agree this with the Authority in the detailed design phase.

Where a sampling type regime is proposed, then, where practical, continuous measurement of an alternative parameter that reflects the real time performance of the KPI should be included.

Measurement

Service Period	Monthly		
Reporting Method	The KPI will be reported by the Response Time Assurance Solution		
Service Hours	Operational Hours	**Permitted Maintenance**	Tier One Service

Levels mapped to measurement

Severity	**Maximum Messaging Delivery Time (seconds)**	Lower Bound % of Messages delivered Within the Maximum Messaging Delivery Time in Service Period	Upper Bound % of Messages delivered Within the Maximum Messaging Delivery Time in Service Period	**Service Points**
Minimum Service Threshold	2.5	[…. ✂ ….]		
Minor KPI Failure	2.5			
Serious KPI Failure	2.5			
Severe KPI Failure	2.5			
KPI Service Threshold	2.5			
Weighting Factor			**100%**	

This document is based on Schedule 2.2 of the Crown Commercial Services Model Services Agreement v1.0 and has been adapted for use by the Emergency Services Mobile Communications Programme.

© Crown copyright

This document is based on Schedule 2.2 of the Crown Commercial Services Model Services Agreement v1.0 and has been adapted for use by the Emergency Services Mobile Communications Programme.

© Crown copyright

25.1.7 Application Approval Testing Efficiency

Application Approval Testing Efficiency	***SPI***	***USP10***

Definition

This measures compliance of the Supplier with the agreed process and time frames for testing of Applications under the Network Approval Testing service for the ESN pursuant to Schedule 2.1

Calculation

The proportion of Applications tested within the agreed process and time frame as a percentage of total Applications submitted for testing in the Service Period shall be calculated as:

$$100 * \left(\frac{\sum Applications\ tested\ \ in\ Service\ Period}{\sum Applications\ submitted\ for\ testing\ in\ Service\ Period} \right)$$

Measurement

Service Period	Monthly		
Reporting Method	The Performance Indicator will be reported by logs showing status of Applications submitted for approval under the agreed process set out in Schedule 2.1		
Service Hours	Business Hours	**Permitted Maintenance**	Tier Three Service

Levels mapped to measurement

Severity	Lower Bound % of Applications tested under agreed process and within time in Service Period	Upper Bound % of Applications tested under agreed process and within time in Service Period	Service Points
Minimum Service Threshold	[…. ✂ ….]		
Minor KPI Failure			
Serious KPI Failure			
Severe KPI Failure			
KPI Service Threshold			
Weighting Factor		**25%**	

This document is based on Schedule 2.2 of the Crown Commercial Services Model Services Agreement v1.0 and has been adapted for use by the Emergency Services Mobile Communications Programme.

© Crown copyright

25.1.8 User Device Approval Testing Efficiency

User Device Approval Testing Efficiency	***SPI***	***USP11***

Definition

This measures compliance of the Supplier with the agreed process and time frames for testing of User Devices under the Network Approval Testing Service for the ESN pursuant to Schedule 2.1

Calculation

The proportion of User Devices tested under the agreed process and within the agreed time frame as a percentage of total User Devices submitted for testing in the Service Period shall be calculated as follows:

$$100 * \left(\frac{\sum User\ Devices\ tested}{\sum Total\ User\ Devices\ submitted\ for\ testing\ \ within\ Service\ Period} \right)$$

Measurement

Service Period	Monthly		
Reporting Method	The Performance Indicator will be reported by logs showing status of User Devices submitted for testing under the agreed process set out in Schedule 2.1		
Service Hours	Business Hours	**Permitted Maintenance**	Tier Three Service

Levels mapped to measurement

Severity	Lower Bound % of User Devices tested under agreed process and within time frame in Service Period	Upper Bound % of User Devices tested under agreed process and within time frame in Service Period	Service Points
Minimum Service Threshold	[…. ✂ ….]		
Minor KPI Failure			
Serious KPI Failure			
Severe KPI Failure			
KPI Service Threshold			
Weighting Factor		**25%**	

This document is based on Schedule 2.2 of the Crown Commercial Services Model Services Agreement v1.0 and has been adapted for use by the Emergency Services Mobile Communications Programme.

© Crown copyright

This document is based on Schedule 2.2 of the Crown Commercial Services Model Services Agreement v1.0 and has been adapted for use by the Emergency Services Mobile Communications Programme.

© Crown copyright

25.1.9 ESN Service Management System Availability

ESN Service Management System Availability	***SPI***	***USA3***

Definition

This measures the percentage of time the ESN Service Management System is Available

Calculation

Availability shall be calculated in minutes (rounded to the nearest minute) by the ESN Service Management System (the Supplier ensuring failures of the ESN Service Management System shall be recorded in the ESN Service Management System when restored to functionality after any period of non-Availability)

Availability for the Service Period shall be calculated as:

$$100 * \left(\frac{\sum Availablity\ of\ ESN\ Service\ Management\ System\ \ measured\ in\ minutes}{\sum Minutes\ in\ the\ Service\ Period} \right)$$

Measurement

Service Period	Monthly		
Reporting Method	The KPI will be reported by the ESN Service Management System		
Service Hours	Operational Hours	**Permitted Maintenance**	Tier One Service

Levels mapped to measurement

Severity	Lower Bound % of ESN Service Management System Availability in Service Period	Upper Bound % of ESN Service Management System Availability in Service Period	Service Points
Minimum Service Threshold	[…. ✂ ….]		
Minor KPI Failure			
Serious KPI Failure			
Severe KPI Failure			
KPI Service Threshold			
Weighting Factor		**100%**	

This document is based on Schedule 2.2 of the Crown Commercial Services Model Services Agreement v1.0 and has been adapted for use by the Emergency Services Mobile Communications Programme.

© Crown copyright

This document is based on Schedule 2.2 of the Crown Commercial Services Model Services Agreement v1.0 and has been adapted for use by the Emergency Services Mobile Communications Programme.

© Crown copyright

25.1.10 ESN Self Service Interface Availability

ESN Self Service Interface Availability	***KPI***	***USA4***

Definition

This measures the percentage of time the ESN Self Service Interface (SSI) Service is Available

Calculation

The Availability shall be calculated in minutes (rounded to the nearest minute) as follows:

$$100 * \left(\frac{\sum Availablity\ SSI\ measured\ in\ minutes}{\sum Minutes\ in\ the\ Service\ Period} \right)$$

Measurement

Service Period	Monthly		
Reporting Method	The KPI will be reported by the ESN Service Management System		
Service Hours	Operational Hours	**Permitted Maintenance**	Tier One Service

Levels mapped to measurement

Severity	Lower Bound % of SSI Availability in Service Period	Upper Bound % of SSI Availability in Service Period	Service Points
Minimum Service Threshold	[….%< ….]		
Minor KPI Failure			
Serious KPI Failure			
Severe KPI Failure			
KPI Service Threshold			
Weighting Factor		**100%**	

This document is based on Schedule 2.2 of the Crown Commercial Services Model Services Agreement v1.0 and has been adapted for use by the Emergency Services Mobile Communications Programme.

© Crown copyright

25.1.11 User Device Management Service Availability

User Device Management Service Availability	***KPI***	***USA5***

Definition

This measures the percentage of time the User Device Management Service is Available

Calculation

Availability shall be calculated by reference to Service Hours in minutes rounded to the nearest minute as follows:

$$100 * \left(\frac{\sum User\ Device\ Management\ Service\ Availablity}{\sum Minutes\ in\ the\ Service\ Period} \right)$$

Measurement

Service Period	Monthly		
Reporting Method	The KPI will be reported by the ESN Service Management System		
Service Hours	Operational Hours	**Permitted Maintenance**	Tier Two Service

Levels mapped to measurement

Severity	Lower Bound % of User Device Management Service Availability in Service Period	Upper Bound % of User Device Management Service Availability in Service Period	Service Points
Minimum Service Threshold	[….✂….]		
Minor KPI Failure			
Serious KPI Failure			
Severe KPI Failure			
KPI Service Threshold			
Weighting Factor		**100%**	

This document is based on Schedule 2.2 of the Crown Commercial Services Model Services Agreement v1.0 and has been adapted for use by the Emergency Services Mobile Communications Programme.

© Crown copyright

This document is based on Schedule 2.2 of the Crown Commercial Services Model Services Agreement v1.0 and has been adapted for use by the Emergency Services Mobile Communications Programme.

© Crown copyright

25.1.12 Billing and Payment Service Availability

Billing and Payment Service Availability	***KPI***	***USA6***

Definition

This measures the percentage of time the billing and payment Service is Available

Calculation

Availability shall be calculated by reference to Business Hours in minutes rounded to the nearest minute as follows:

$$100 * \left(\frac{\sum Billing\ and\ Payment\ Service\ Availablity\ during\ Business\ Hours}{\sum Minutes\ Business\ Hours\ in\ the\ Service\ Period} \right)$$

Measurement

Service Period	Monthly		
Reporting Method	The KPI will be reported by the ESN Service Management System		
Service Hours	Business Hours	**Permitted Maintenance**	Tier Three Service

Levels mapped to measurement

Severity	Lower Bound % of Billing and Payment Service Availability in Service Period	Upper Bound % of Billing and Payment Service Availability in Service Period	Service Points
Minimum Service Threshold	[…. ✂ ….]		
Minor KPI Failure			
Serious KPI Failure			
Severe KPI Failure			
KPI Service Threshold			
Weighting Factor		**25%**	

This document is based on Schedule 2.2 of the Crown Commercial Services Model Services Agreement v1.0 and has been adapted for use by the Emergency Services Mobile Communications Programme.

© Crown copyright

25.1.13 Billing Solution Accuracy

Billing Solution Accuracy	***SPI***	***USP6***

Definition

The Supplier will be measured on the accuracy of the bills issued by the billing solution.

Calculation

The proportion of inaccurate bills issued by the billing solution (where inaccurate by >1% of the total amount payable under such invoice) will be measured.

Example:

The Billing Solution issues 120 Bills in the Service Period of which 115 are accurate, 3 of these are inaccurate by <1% of the total amount payable and 2 are inaccurate by> 1% of the total amount payable. Two instances shall be recorded for the Service Period.

The Supplier issues 90 Bills in the Service Period of which 88 are accurate, 2 are inaccurate by <1% of the total amount payable. No instances shall be recorded for the Service Period.

The measure is:

$$100 * \left(\frac{\sum Bills\ issued\ by\ Billing\ Solution\ with\ errors\ greater\ than\ 1\%}{\sum Bills\ issued\ by\ Billing\ Solution\ in\ the\ Service\ Period} \right)$$

Measurement

Service Period	Monthly		
Reporting Method	The KPI will be reported by information derived from the following: a) Queries and complaints about billing inaccuracy from User Organisations and proven billing errors logged b) Random samples / audits conducted by the Authority or Delivery Partner acting on the Authority's behalf		
Service Hours	Business Hours	**Permitted Maintenance**	Tier Three Service

Levels mapped to measurement

Severity	Lower Bound % of Billing Accuracy in Service Period	Upper Bound % of Billing Accuracy in Service Period	Service Points
Minimum Service Threshold	[….✂….]		
Minor KPI Failure			
Serious KPI Failure			

This document is based on Schedule 2.2 of the Crown Commercial Services Model Services Agreement v1.0 and has been adapted for use by the Emergency Services Mobile Communications Programme.

© Crown copyright

Severe KPI Failure			
KPI Service Threshold			
Weighting Factor		**100%**	

This document is based on Schedule 2.2 of the Crown Commercial Services Model Services Agreement v1.0 and has been adapted for use by the Emergency Services Mobile Communications Programme.

© Crown copyright

25.1.14 Billing Solution On Time Billing

Billing Solution On Time Billing	***SPI***	***USP7***

Definition

The proportion of bills issued or due to be issued by the billing solution which are actually issued within the agreed time frames and under the agreed process pursuant to Schedule 2.1 will be measured.

Calculation

The Supplier will be measured on the proportion of bills due to be issued which are issued on time in the Service Period. In the event that bills were due to be issued in the current Service Period and they were not issued until the next Service Period, the non-compliance will be recorded in the current Service Period and not in the next Service Period.

$$\frac{\text{Number of bills issued on time}}{\text{Total number of bills due to be issued within the Service Period according to agreed time frame and process}} \times 100 = \text{KPI\%}$$

Examples:

The Supplier is due to issue 80 bills in the current Service Period of which 78 are issued on time. The KPI measure for the Service Period shall be 97.50% (78/80)

The Supplier is due to issue 120 bills in the current Service Period and 120 in the next Service Period. 30 bills in the current Service Period are issued late being issued on the 3rd of the next Service Period. Of the 120 bills due to be issued in the next Service Period 5 are issued late. The KPI Measure for the current Service Period shall be 75.00% (90/120) and the KPI Measure for the next Service Period shall be 95.83% (115/120)

Measurement

Service Period	Monthly		
Reporting Method	The KPI will be reported by: a) logs of the billing and payment Service b) the ESN Service Management System		
Service Hours	Business Hours	**Permitted Maintenance**	Tier Three Service

This document is based on Schedule 2.2 of the Crown Commercial Services Model Services Agreement v1.0 and has been adapted for use by the Emergency Services Mobile Communications Programme.

© Crown copyright

Levels mapped to measurement

Severity	Lower Bound % of Bills issued on time within Service Period	Upper Bound % of Bills issued on time within Service Period within Service Period	Service Points
Minimum Service Threshold	[….✂….]		
Minor KPI Failure			
Serious KPI Failure			
Severe KPI Failure			
KPI Service Threshold			
Weighting Factor		**10%**	

This document is based on Schedule 2.2 of the Crown Commercial Services Model Services Agreement v1.0 and has been adapted for use by the Emergency Services Mobile Communications Programme.

© Crown copyright

25.1.15 Billing Solution Collections Process Efficiency

Billing Solution Collections Process Efficiency	***SPI***	***USP8***

Definition

This measures the Supplier's compliance with the collections process agreed for automated payment collections under the billing and payment Service pursuant to Schedule 2.1 (The parties may agree a version of this measure for each stage of the automated payment collections process)

Calculation

The proportion of automated payment collections complying with the agreed automated payment collection process and time frames will be measured as follows:

$$100 * \left(\frac{\sum Automated\ Payment\ Collections\ processed\ in\ compliance\ with\ agreed\ time/process}{\sum Automated\ Payment\ Collections\ due\ to\ be\ processed\ under\ agreed \frac{time}{process} in\ Service\ Period} \right)$$

Measurement

Service Period	Monthly		
Reporting Method	The KPI will be reported by: a) logs of the Billing and Payment Service b) the ESN Service Management System and ESN Self Service Interface Portal		
Service Hours	Business Hours	**Permitted Maintenance**	Tier Two Service

Levels mapped to measurement

Severity	Lower Bound % of Automated Collections Processed within agreed time/process within Service Period	Upper Bound % of Automated Collections Processed within agreed time/process within Service Period	Service Points
Minimum Service Threshold	[….✂….]		
Minor KPI Failure			
Serious KPI Failure			
Severe KPI Failure			
KPI Service Threshold			
Weighting Factor		**25%**	

This document is based on Schedule 2.2 of the Crown Commercial Services Model Services Agreement v1.0 and has been adapted for use by the Emergency Services Mobile Communications Programme.

© Crown copyright

25.1.16 Severity One Service Incident Response Time

Severity One Service Incident Response Time	***KPI***	***USS1***

Definition

Each Severity One Service Incident shall be treated separately and shall accrue Service Points if the Response Time for the provision of the Initial Incident Investigation Conclusion from the Incident Identification Time is not met.

Calculation

Response Time will be measured and reported for each Severity One Service Incident separately and Service Points will accrue for each Severity One Service Incident where the time lapse between the Incident Identification Time-and the Initial Incident Investigation Conclusion Time is above the Response Time set out in Paragraph 14.9 of this Schedule.

Measurement

Service Period	*Monthly*		
Reporting Method	The KPI will be measured through the use of the following information recorded for each Severity One Service Incident: *(a) the Incident Identification Time; and* *(b) the Initial Incident Investigation Conclusion Time.*		
Service Hours	*Operational Hours*	**Permitted Maintenance**	*Tier One Service*

Levels mapped to measurement

Severity	Response Time Upper Bound	Response Time Lower Bound	Service Points
Minimum Service Threshold	[….✂….]		
Minor KPI Failure			
Serious KPI Failure			
Severe KPI Failure			
KPI Service Threshold			

This document is based on Schedule 2.2 of the Crown Commercial Services Model Services Agreement v1.0 and has been adapted for use by the Emergency Services Mobile Communications Programme.

© Crown copyright

Weighting Factor	**50%**

This document is based on Schedule 2.2 of the Crown Commercial Services Model Services Agreement v1.0 and has been adapted for use by the Emergency Services Mobile Communications Programme.

© Crown copyright

25.1.17 Severity Two and Three Service Incident Response Time

Severity Two and Three Service Incident Response Time	***SPI***	***USS2***

Definition

The proportion of Severity Two and Three Initial Incident Investigation Conclusions provided to the Authority outside the Response Times set out in Paragraph 14.9 of this Schedule will be measured.

Calculation

*Response Time will be measured and reported for each Severity Two and Three Service Incident separately. Service Points will accrue for the proportion of total such Service Incidents where the time lapse between the Incident Identification Time and the Initial Incident Investigation Conclusion Time is above the Response Time set out in Paragraph 14.9 of this Schedule (for the purposes of this SPI "**Maximum Response Time**").*

The calculation will be the proportion of Response Times above the Maximum Response Time as follows:

$$100 * (1 - \frac{\sum Severity\ Two\ and\ Three\ Incident\ Response\ Times\ abiove\ Maximum\ Response\ Times}{\sum \text{Severity Two and Three Service Incidents in the Service Period}}$$

Measurement

Service Period	*Monthly*		
Reporting Method	The KPI will be measured through the use of the following information recorded for each such Incident: *(a) the Incident Identification Time; and* *(b) the Initial Incident Investigation Conclusion Time.*		
Service Hours	*Severity 2 - Operational Hours* *Severity 3 - Business Hours*	**Permitted Maintenance**	*Tier One Service*

Levels mapped to measurement

Severity	% Severity Two and Three Service Incident Response Times < Maximum Response Times Lower Bound	% Severity Two and Three Service Incident Response Times < Maximum Response Times Upper Bound	Service Points

This document is based on Schedule 2.2 of the Crown Commercial Services Model Services Agreement v1.0 and has been adapted for use by the Emergency Services Mobile Communications Programme.

© Crown copyright

Minimum Service Threshold	[….✂….]		
Minor KPI Failure			
Serious KPI Failure			
Severe KPI Failure			
KPI Service Threshold			
Weighting Factor		**31.25%**	

This document is based on Schedule 2.2 of the Crown Commercial Services Model Services Agreement v1.0 and has been adapted for use by the Emergency Services Mobile Communications Programme.

© Crown copyright

25.1.18 Severity Four and Five Service Incident Response Time

Severity Four and Five Service Incident Response Time	***SPI***	***USS3***

Definition

The proportion of Severity Four and Five Initial Incident Investigation Conclusions provided to the Authority outside the Response Times set out in Paragraph 14.9 of this Schedule will be measured.

Calculation

*Response Time will be measured and reported for each Severity Four and Five Service Incident separately. Service Points will accrue for the proportion of total such Service Incidents where the time lapse between the Incident Identification Time and the Initial Incident Investigation Conclusion Time is above the Response Time set out in Paragraph 14.9 of this Schedule (for the purposes of this SPI "**Maximum Response Time**").*

The calculation will be the proportion of Response Times above the Maximum Response Time as follows:

$$100 * (1 - \frac{\sum Severity\ Four\ and\ Five\ Incident\ Response\ Times\ abiove\ Maximum\ Response\ Times}{\sum \text{SeverityFour and Five Incidents in the Service Period}}$$

Measurement

Service Period	*Monthly*		
Reporting Method	The KPI will be measured through the use of the following information recorded for each such Incident: *(a) the Incident Identification Time; and* *(b) the Initial Incident Investigation Conclusion Time.*		
Service Hours	*Business Hours*	**Permitted Maintenance**	*Tier One Service*

Levels mapped to measurement

Severity	% Severity Four and Five Service Incident Response Times < Maximum Response Times Lower Bound	% Severity Four and Five Service Incident Response Times < Maximum Response Times Upper Bound	Service Points

This document is based on Schedule 2.2 of the Crown Commercial Services Model Services Agreement v1.0 and has been adapted for use by the Emergency Services Mobile Communications Programme.

© Crown copyright

Minimum Service Threshold	[….✂….]		
Minor KPI Failure			
Serious KPI Failure			
Severe KPI Failure			
KPI Service Threshold			
Weighting Factor		**17.5%**	

This document is based on Schedule 2.2 of the Crown Commercial Services Model Services Agreement v1.0 and has been adapted for use by the Emergency Services Mobile Communications Programme.

© Crown copyright

25.1.19 Severity One Service Incident Fix Time

Severity One Service Incident Fix Time	***KPI***	***USS4***

Definition

Each Severity One Service Incident shall be treated separately and shall accrue Service Points if the Fix Time for the Resolution of the Service Incident from the Initial Incident Investigation Conclusion Time is not met.

Calculation

Fix Time will be measured and reported for each Severity One Service Incident separately and Service Points will accrue for each Severity One Service Incident where the time lapse between the Initial Incident Investigation Conclusion Time and the Resolution is above the Fix Time set out in Paragraph 14.9 of this Schedule.

Measurement

Service Period	*Monthly*		
Reporting Method	The *KPI* will be measured through the use of the following information recorded for each such Severity One Service Incident *(a) Incident Investigation Conclusion Time; and* *(b) Resolution of the Severity One Service Incident.*		
Service Hours	*Operational Hours*	**Permitted Maintenance**	*Tier One Service*

Levels mapped to measurement

Severity	Fix Time Upper Bound	Fix Time Lower Bound	Service Points
Minimum Service Threshold	[….✂….]		
Minor KPI Failure			
Serious KPI Failure			
Severe KPI Failure			
KPI Service Threshold			
Weighting Factor		**50%**	

This document is based on Schedule 2.2 of the Crown Commercial Services Model Services Agreement v1.0 and has been adapted for use by the Emergency Services Mobile Communications Programme.

© Crown copyright

25.1.20 Severity Two and Three Service Incident Fix Time

Severity Two and Three Service Incident Fix Time	***KPI***	***USS5***

Definition

The proportion of Severity Two and Three Service Incidents Resolved outside the Fix Times set out in Paragraph 14.9 of this Schedule will be measured.

Calculation

*Fix Time will be measured and reported for each Severity Two and Three Service Incident separately. Service Points will accrue for the proportion of total such Service Incidents where the time lapse between the Initial Incident Investigation Conclusion Time and the Resolution is above the Fix Time set out in Paragraph 14.9 of this Schedule ("**Maximum Fix Time**").*

The calculation will be the proportion of Fix Times above the Maximum Fix Time as follows:

$$100 * (1 - \frac{\sum Severity\ Two\ and\ Three\ Incident\ Fix\ Times\ abiove\ Maximum\ Fix\ \ Times}{\sum \text{Severity Two and Three Service Incidents in the Service Period}}$$

Measurement

Service Period	*Monthly*		
Reporting Method	The *KPI* will be measured through the use of the following information recorded for each such Service Incident *(a) The Initial Incident Investigation Conclusion Time; and* *(b) Resolution of the Severity Two and Three Service Incidents*		
Service Hours	*Severity Two - Operational Hours* *Severity Three – Business Hours*	**Permitted Maintenance**	*Tier One Service*

Levels mapped to measurement

Severity	% Severity Two and Three Service Incident Fix Times < Maximum Fix Times Lower Bound	% Severity Two and Three Service Incident Fix Times < Maximum Fix Times Upper Bound	Service Points
Minimum Service Threshold	[…. ✂ ….]		
Minor KPI Failure			

This document is based on Schedule 2.2 of the Crown Commercial Services Model Services Agreement v1.0 and has been adapted for use by the Emergency Services Mobile Communications Programme.

© Crown copyright

Serious KPI Failure			
Severe KPI Failure			
KPI Service Threshold			
Weighting Factor		**31.25%**	

This document is based on Schedule 2.2 of the Crown Commercial Services Model Services Agreement v1.0 and has been adapted for use by the Emergency Services Mobile Communications Programme.

© Crown copyright

25.1.21 Severity Four and Five Service Incident Fix Time

Severity Four and Five Service Incident Fix Time	***SPI***	***USS6***

Definition

The proportion of Severity Four and Five Service Incidents Resolved outside the Fix Times set out in Paragraph 14.9 of this Schedule will be measured.

Calculation

*Fix Time will be measured and reported for each Severity Four and Five Service Incident separately. Service Points will accrue for the proportion of total such Service Incidents where the time lapse between the Initial Incident Investigation Conclusion Time (and the Resolution is above the Fix Time set out in Paragraph 14.9 of this Schedule ("**Maximum Fix Time**").*

The calculation will be the proportion of Fix Times above the Maximum Fix Time as follows:

$$100 * (1 - \frac{\sum Severity\ Four\ and\ Five\ \ Incident\ Fix\ Times\ above\ Maximum\ Fix\ \ Times}{\sum \text{Severity Four and Five Service Incidents in the Service Period}}$$

Measurement

Service Period	*Monthly*		
Reporting Method	The *KPI* will be measured through the use of the following information recorded for each such Service Incident *(a) The Initial Incident Investigation Conclusion Time; and* *(b) Resolution of the Severity Four and Five Service Incidents*		
Service Hours	*Business Hours*	**Permitted Maintenance**	*Tier One Service*

Levels mapped to measurement

Severity	% Severity Four and Five Service Incident Fix Times < Maximum Fix Times Lower Bound	% Severity Four and Five Service Incident Fix Times < Maximum Fix Times Upper Bound	Service Points
Minimum Service Threshold	[…. ✂ ….]		
Minor KPI Failure			
Serious KPI Failure			

This document is based on Schedule 2.2 of the Crown Commercial Services Model Services Agreement v1.0 and has been adapted for use by the Emergency Services Mobile Communications Programme.

© Crown copyright

Severe KPI Failure			
KPI Service Threshold			
Weighting Factor		**17.5%**	

This document is based on Schedule 2.2 of the Crown Commercial Services Model Services Agreement v1.0 and has been adapted for use by the Emergency Services Mobile Communications Programme.

© Crown copyright

25.1.22 Key Documents Delivered On Time

Key Documents Delivered On Time	***SPI***	***USS7***

Definition

This measures the proportion of Key Documents delivered on time and in accordance with the process agreed for such document delivery. The following are the *Key Documents:*

(a) Technical design documentation;
(b) Service Management Framework documentation;
(c) Service Failure Reports;
(d) Continuous Improvement Plans;
(e) Business Continuity Plans;
(f) Quality Plans;
(g) Performance Monitoring Reports;
(h) Exit Management Plans

Calculation

The following shall be recorded:

(i) number of Key Documents to be delivered during the Service Period under the process agreed by the parties under the Agreement;

(j) scheduled date of delivery of such Key Documents; and

(k) actual delivery date of delivery by the Supplier of such Key Documents.

The proportion Key Documents delivered on time and in accordance with the agreed process shall be calculated as follows:

$$100 * \frac{\sum Key\ Documents\ delivered\ by\ agreed\ time\ and\ in\ compliance\ with\ agreed\ process}{\sum Key\ Documents\ to\ be\ delivered\ in\ Sevrice\ Period}$$

Measurement

Service Period	*Quarterly*		
Reporting Method	The KPI will be reported under the processes agreed with the Authority for the Supplier's Performance Management Approach		
Service Hours	*Business Hours*	**Permitted Maintenance**	*Tier Three Service*

This document is based on Schedule 2.2 of the Crown Commercial Services Model Services Agreement v1.0 and has been adapted for use by the Emergency Services Mobile Communications Programme.

© Crown copyright

Levels mapped to measurement

Severity	% Key Documents Delivered on Time and according to agreed process in Service Period Lower Bound	% Key Documents Delivered on Time and according to agreed process in Service Period Upper Bound	Service Points
Minimum Service Threshold	[…. ✂ ….]		
Minor KPI Failure			
Serious KPI Failure			
Severe KPI Failure			
KPI Service Threshold			
Weighting Factor		**10%**	

This document is based on Schedule 2.2 of the Crown Commercial Services Model Services Agreement v1.0 and has been adapted for use by the Emergency Services Mobile Communications Programme.

© Crown copyright

25.1.23 Call Answer Time

Call Answer Time	***KPI***	***USS8***

Definition

*This measures the delay in answering calls by the Authority or User Organisations / Users to the Supplier Service Desk. The measure has an absolute floor Call Answer Time of within 2 minutes (**120 seconds)***

Calculation

The Call Answer Time shall be measured to the nearest second by calculating the time lapse between the time at which calls to the Supplier Service Desk are first received and the time at which such calls are answered by the Supplier.

Each Call answered will be measured across two applicable thresholds:

- **A)** Calls answered within 15 seconds
- **B)** Calls answered within 30 seconds

The Maximum Call Answer Times are set for the upper and lower bounds of each category of KPI Failure.

Proportion of calls answered within the applicable Maximum Call Answer Time shall be calculated as follows:

$$100 * \frac{\sum Calls\ to\ Service\ Desk\ answered\ within\ applicable\ Maximum\ Call\ Answer\ Time}{\sum Total\ Calls\ made\ to\ the\ Service\ Desk\ \ in\ the\ Service\ Period}$$

Measurement

Service Period	*Monthly*		
Reporting Method	The KPI will be reported by the Supplier Service Desk telephony system and/or the ESN Service Management System		
Service Hours	*Operational Hours*	**Permitted Maintenance**	*Tier One Service*

Levels mapped to measurement

Severity	% of calls Answered within the Call Answer Time	Call Answer Time (within seconds)	Service Points
Minimum Service Threshold	[….✂….]		

This document is based on Schedule 2.2 of the Crown Commercial Services Model Services Agreement v1.0 and has been adapted for use by the Emergency Services Mobile Communications Programme.

© Crown copyright

Minor KPI Failure			
Serious KPI Failure			
Severe KPI Failure			
KPI Service Threshold			
Weighting Factor		**25%**	

This document is based on Schedule 2.2 of the Crown Commercial Services Model Services Agreement v1.0 and has been adapted for use by the Emergency Services Mobile Communications Programme.

© Crown copyright

25.1.24 Calls Abandoned

Calls Abandoned	***SPI***	***USS9***

Definition

This measures the proportion of calls which are abandoned for calls to the Supplier Service Desk where the caller has remained on the line for at least 30 seconds.

Calculation

*The Call Answer Time shall be measured to the nearest second by calculating the time lapse between the time at which calls to the Supplier Service Desk are first received and the time at which such calls are abandoned by the caller before answer by the Supplier for any calls where the caller remains on the line for at least 30 seconds ("**Abandoned Call** ").*

The proportion of Abandoned Calls shall be calculated as follows:

$$100 * \frac{\sum Abandoned\ Calls\ to\ Service\ Desk}{\sum Total\ Calls > 30\ seconds\ in\ queue\ made\ to\ the\ Service\ Desk\ \ in\ the\ Service\ Period}$$

The Supplier shall record the following information:

(a) length of time each call is held in queue;

(b) number of calls abandoned before being answered.

(c)

Measurement

Service Period	*Monthly*		
Reporting Method	The SPI will be measured through records from the Supplier Service Desk telephony system and/or the ESN Service Management System		
Service Hours	*Operational Hours*	**Permitted Maintenance**	*Tier One Service*

Levels mapped to measurement

Severity	% of Abandoned Calls Lower Bound	% of Abandoned Calls Upper Bound	Service Points
Minimum Service Threshold	[…. ✂ ….]		

This document is based on Schedule 2.2 of the Crown Commercial Services Model Services Agreement v1.0 and has been adapted for use by the Emergency Services Mobile Communications Programme.

© Crown copyright

Minor KPI Failure			
Serious KPI Failure			
Severe KPI Failure			
KPI Service Threshold			
Weighting Factor		**25%**	

This document is based on Schedule 2.2 of the Crown Commercial Services Model Services Agreement v1.0 and has been adapted for use by the Emergency Services Mobile Communications Programme.

© Crown copyright

25.1.25 Recovery Time Objective (Priority One Services)

Recovery Time Objective (Priority One Services)	***KPI***	***USR1***

Definition

The Recovery Time Objective (Recovery Priority One Services) measures the time between a Service Disruption or Disaster occurring, and the re-instatement of the relevant Services. The Services in scope of this measure are listed in Annex 1 as Priority One in the Recovery Priority column.

Calculation

The Supplier shall record the following information:

(a) The Disaster Occurrence Time: the time at which the Disaster occurred;

(b) The Service Recovery Time: the time, following the occurrence of the Disaster, that Services are re-instated and are being performed in accordance with the requirements of the Agreement.

The Actual Recovery Time shall equal the difference between the Disaster Occurrence Time and the Service Recovery Time. This shall be compared with the Recovery Time Objective defined in this measure for those Services in scope.

Measurement

Service Period	*Monthly*		
Reporting Method	The KPI will be measured through the use of the following information: *a) The Disaster Occurrence Time* *b) The Service Recovery Time*		
Service Hours	*Operational Hours*	**Permitted Maintenance**	*Tier One Service*

Levels mapped to measurement

Severity	RTO Upper Bound	RTO Lower Bound	Service Points
Minimum Service Threshold	[…. ✂ ….]		
Minor KPI Failure			
Serious KPI Failure			
Severe KPI Failure			

This document is based on Schedule 2.2 of the Crown Commercial Services Model Services Agreement v1.0 and has been adapted for use by the Emergency Services Mobile Communications Programme.

© Crown copyright

KPI Service Threshold			
Weighting Factor		**100%**	

This document is based on Schedule 2.2 of the Crown Commercial Services Model Services Agreement v1.0 and has been adapted for use by the Emergency Services Mobile Communications Programme.

© Crown copyright

25.1.26 Recovery Point Objective (Priority One Services)

Recovery Point Objective (Priority One Services)	***KPI***	***USR2***

Definition

The Recovery Point Objective (Recovery Priority One Services) measures the point in time, before the Service Disruption or Disaster, to which the relevant Services are recovered, following the Recovery Time. The Services in scope of this measure are listed in Annex 1 as Priority One in the Recovery Priority column.

Calculation

The Supplier shall record the following information:

(a) The Disaster Occurrence Time: the time at which the Service Disaster occurred;

(b) The Service Recovery Time: the time, following the occurrence of the Disaster, that Services are re-instated and are being performed in accordance with the requirements of the Agreement;

(c) The Actual Recovery Point: the point in time, occurring before the Service Disruption or Disaster, to which the Contractor has recovered all data associated with the Services at the Service Recovery Time.

The Actual Recovery Point shall be compared with the target times set out in this measure for the applicable Services;

Measurement

Service Period	*Monthly*		
Reporting Method	The KPI will be measured through the use of the following information: *a) The Disaster Occurrence Time;* *b) The Service Recovery Time;* *c) The Actual Recovery Point.*		
Service Hours	*Operational Hours*	**Permitted Maintenance**	*Tier One Service*

Levels mapped to measurement

Severity	RPO Upper Bound	RPO Lower Bound	Service Points
Minimum Service Threshold	[….✂….]		
Minor KPI Failure			

This document is based on Schedule 2.2 of the Crown Commercial Services Model Services Agreement v1.0 and has been adapted for use by the Emergency Services Mobile Communications Programme.

© Crown copyright

Serious KPI Failure			
Severe KPI Failure			
KPI Service Threshold			
Weighting Factor		**100%**	

This document is based on Schedule 2.2 of the Crown Commercial Services Model Services Agreement v1.0 and has been adapted for use by the Emergency Services Mobile Communications Programme.

© Crown copyright

25.1.27 Recovery Time Objective (Priority Two Services)

Recovery Time Objective (Priority Two Services)	***KPI***	***USR3***

Definition

The Recovery Time Objective (Recovery Priority Two Services) measures the time between a Service Disruption or Disaster occurring, and the re-instatement of the relevant Services. The Services in scope of this measure are listed in Annex 1 as Priority Two in the Recovery Priority column.

Calculation

The Supplier shall record the following information:

(a) The Disaster Occurrence Time: the time at which the Disaster occurred;

(b) The Service Recovery Time: the time, following the occurrence of the Disaster, that Services are re-instated and are being performed in accordance with the requirements of the Agreement.

The Actual Recovery Time shall equal the difference between the Disaster Occurrence Time and the Service Recovery Time. This shall be compared with the Recovery Time Objective defined in this measure for those Services in scope.

Measurement

Service Period	*Monthly*		
Reporting Method	The KPI will be measured through the use of the following information: *a) The Disaster Occurrence Time* *b) The Service Recovery Time*		
Service Hours	*Business Hours*	**Permitted Maintenance**	*Tier Two Service*

Levels mapped to measurement

Severity	RTO Upper Bound	RTO Lower Bound	Service Points
Minimum Service Threshold	[…. ✂ ….]		
Minor KPI Failure			
Serious KPI Failure			
Severe KPI Failure			
KPI Service Threshold			

This document is based on Schedule 2.2 of the Crown Commercial Services Model Services Agreement v1.0 and has been adapted for use by the Emergency Services Mobile Communications Programme.

© Crown copyright

Weighting Factor	**75%**

25.1.28 Recovery Point Objective (Priority Two Services)

Recovery Point Objective (Priority Two Services)	***KPI***	***USR4***

Definition

The Recovery Point Objective (Recovery Priority Two Services) measures the point in time, before the Service Disruption or Disaster, to which the relevant Services are recovered, following the Recovery Time. The Services in scope of this measure are listed in Annex 1 as Priority Two in the Recovery Priority column.

Calculation

The Supplier shall record the following information:

(a) The Disaster Occurrence Time: the time at which the Service Disaster occurred;

(b) The Service Recovery Time: the time, following the occurrence of the Disaster, that Services are re-instated and are being performed in accordance with the requirements of the Agreement;

(c) The Actual Recovery Point: the point in time, occurring before the Service Disruption or Disaster, to which the Contractor has recovered all data associated with the Services at the Service Recovery Time.

The Actual Recovery Point shall be compared with the target times set out in this measure for the applicable Services.

Measurement

Service Period	*Monthly*		
Reporting Method	The KPI will be measured through the use of the following information: *a) The Disaster Occurrence Time;* *b) The Service Recovery Time;* *c) The Actual Recovery Point.*		
Service Hours	*Business Hours*	**Permitted Maintenance**	*Tier Two Service*

Levels mapped to measurement

Severity	RPO Upper Bound	RPO Lower Bound	Service Points
Minimum Service Threshold	[….✂….]		

This document is based on Schedule 2.2 of the Crown Commercial Services Model Services Agreement v1.0 and has been adapted for use by the Emergency Services Mobile Communications Programme.

© Crown copyright

Minor KPI Failure			
Serious KPI Failure			
Severe KPI Failure			
KPI Service Threshold			
Weighting Factor		**75%**	

This document is based on Schedule 2.2 of the Crown Commercial Services Model Services Agreement v1.0 and has been adapted for use by the Emergency Services Mobile Communications Programme.

© Crown copyright

25.1.29 Recovery Time Objective (Priority Three Services)

Recovery Time Objective (Priority Three Services)	***SPI***	***USR5***

Definition

The Recovery Time Objective (Recovery Priority Three Services) measures the time between a Service Disruption or Disaster occurring, and the re-instatement of the relevant Services. The Services in scope of this measure are listed in Annex 1 as Priority Three in the Recovery Priority column.

Calculation

The Supplier shall record the following information:

(a) The Disaster Occurrence Time: the time at which the Disaster occurred;

(b) The Service Recovery Time: the time, following the occurrence of the Disaster, that Services are re-instated and are being performed in accordance with the requirements of the Agreement.

The Actual Recovery Time shall equal the difference between the Disaster Occurrence Time and the Service Recovery Time. This shall be compared with the Recovery Time Objective defined in this measure for those Services in scope.

Measurement

Service Period	*Monthly*		
Reporting Method	The KPI will be measured through the use of the following information: *a) The Disaster Occurrence Time* *b) The Service Recovery Time*		
Service Hours	*Business Hours*	**Permitted Maintenance**	*Tier Three Service*

Levels mapped to measurement

Severity	RTO Upper Bound	RTO Lower Bound	Service Points
Minimum Service Threshold	[….✂….]		
Minor KPI Failure			
Serious KPI Failure			

This document is based on Schedule 2.2 of the Crown Commercial Services Model Services Agreement v1.0 and has been adapted for use by the Emergency Services Mobile Communications Programme.

© Crown copyright

Severe KPI Failure			
KPI Service Threshold			
Weighting Factor		**50%**	

This document is based on Schedule 2.2 of the Crown Commercial Services Model Services Agreement v1.0 and has been adapted for use by the Emergency Services Mobile Communications Programme.

© Crown copyright

25.1.30 Recovery Point Objective (Priority Three Services)

Recovery Point Objective (Priority Three Services)	***SPI***	***USR6***

Definition

The Recovery Point Objective (Recovery Priority Three Services) measures the point in time, before the Service Disruption or Disaster, to which the relevant Services are recovered, following the Recovery Time. The Services in scope of this measure are listed in Annex 1 as Priority Three in the Recovery Priority column.

Calculation

The Supplier shall record the following information:

(a) The Disaster Occurrence Time: the time at which the Service Disaster occurred;

(b) The Service Recovery Time: the time, following the occurrence of the Disaster, that Services are re-instated and are being performed in accordance with the requirements of the Agreement;

(c) The Actual Recovery Point: the point in time, occurring before the Service Disruption or Disaster, at which the Contractor has recovered all data associated with the Services at the Recovery Time.

The Actual Recovery Point shall be compared with the target times set out in this measure for the applicable Services;.

Measurement

Service Period	*Monthly*		
Reporting Method	The KPI will be measured through the use of the following information: *a) The Disaster Occurrence Time;* *b) The Service Recovery Time;* *c) The Actual Recovery Point.*		
Service Hours	*Business Hours*	**Permitted Maintenance**	*Tier Three Service*

Levels mapped to measurement

Severity	RPO Upper Bound	RPO Lower Bound	Service Points
Minimum Service Threshold	[….✂….]		
Minor KPI Failure			

This document is based on Schedule 2.2 of the Crown Commercial Services Model Services Agreement v1.0 and has been adapted for use by the Emergency Services Mobile Communications Programme.

© Crown copyright

Serious KPI Failure			
Severe KPI Failure			
KPI Service Threshold			
Weighting Factor		**50%**	

This document is based on Schedule 2.2 of the Crown Commercial Services Model Services Agreement v1.0 and has been adapted for use by the Emergency Services Mobile Communications Programme.

© Crown copyright

25.1.31 Change Request Impact Assessments Efficiency

Change Request Impact Assessments Efficiency	***SPI***	***USS10***

Definition

The Contract Change Request Impact Assessment Efficiency measure tracks the timeliness in provision of Impact Assessments in accordance with the Change Control Procedure

Calculation

The Supplier shall comply with the time requirements and process to deliver Initial Impact Assessments for each Contract Change Request agreed under the Change Control Procedure. The Supplier shall record the following information:

(a) The number of Initial Impact Assessments delivered by the Supplier to the Authority associated with individual Change Requests; and

(b) The number of Initial Impact Assessments delivered by the Supplier within the agreed timeframe and in accordance with the agreed process in the Service Period.

The calculation shall be as follows:

$$100 * \frac{\sum Impact\ Assessments\ delivered\ within\ agreed\ timeframe\ and\ process\ in\ Service\ Period}{\sum Impact\ Assessments\ due\ to\ be\ delivered\ in\ Service\ Period}$$

Measurement

Service Period	*Quarterly*		
Reporting Method	The *KPI will be as reported as part of the Performance Monitoring via the Single Supplier Service Meeting.*		
Service Hours	*Business Hours*	**Permitted Maintenance**	*Tier Two Service*

Levels mapped to measurement

Severity	Lower Bound % of Impact Assessments Delivered on Time Within Service Period	Upper Bound % of Impact Assessments Delivered on Time Within Service Period	Service Points
Minimum Service Threshold	[…. ✂ ….]		

This document is based on Schedule 2.2 of the Crown Commercial Services Model Services Agreement v1.0 and has been adapted for use by the Emergency Services Mobile Communications Programme.

© Crown copyright

Minor KPI Failure			
Serious KPI Failure			
Severe KPI Failure			
KPI Service Threshold			
Weighting Factor		**25%**	

This document is based on Schedule 2.2 of the Crown Commercial Services Model Services Agreement v1.0 and has been adapted for use by the Emergency Services Mobile Communications Programme.

© Crown copyright

25.1.32 Late Notice Change Requests

Late Notice Change Requests	***SPI***	***USS11***

Definition

The Late Notice Change Requests measure tracks the number of Change Requests raised by the Supplier that fall within the categorisation of 'Late Notice Operational Change' in order to track trends in the change management and assess compliance in line with Schedule 8.2 within each Service Period

Calculation

The Supplier shall record the following information:

(a) The number of Change Requests raised by the Supplier; and

(b) The number of Change Requests determined by the Authority to be categorised as Late Notice Changes.

The Supplier shall calculate performance as follows:

$$100 * \frac{\sum Late\ Notice\ Change\ Requests\ raised\ by\ the\ Supplier}{\sum Change\ Requests\ Raised\ by\ the\ Supplier}$$

Measurement

Service Period	*Quarterly*		
Reporting Method	The KPI will be as reported to the Change Management Board and recorded on the Forward Schedule of Change.		
Service Hours	*Business Hours*	**Permitted Maintenance**	*Tier Two Service*

Levels mapped to measurement

Severity	Upper Bound % of Change Requests categorised as Late Notice Within Service Period	Lower Bound % of Change Requests categorised as Late Notice Within Service Period	Service Points
Minimum Service Threshold	[….✂….]		
Minor KPI Failure			
Serious KPI Failure			

This document is based on Schedule 2.2 of the Crown Commercial Services Model Services Agreement v1.0 and has been adapted for use by the Emergency Services Mobile Communications Programme.

© Crown copyright

Severe KPI Failure			
KPI Service Threshold			
Weighting Factor		**25%**	

This document is based on Schedule 2.2 of the Crown Commercial Services Model Services Agreement v1.0 and has been adapted for use by the Emergency Services Mobile Communications Programme.

© Crown copyright

25.1.33 PSCS Administration Service Availability

PSCS Administration Service Availability	***KPI***	***USA7***

Definition

This measures the Availability of the PSCS Administration Service (which is made Available via the ESN Self Service Interface)

Calculation

The Availability shall be calculated in minutes and shall be rounded to the nearest minute for the Service Period as follows:

$$100 * \left(\frac{\sum Availablity \text{ PSCS Admin Service } in\ minutes\ in\ Service\ Period}{\sum Minutes\ in\ the\ Service\ Period} \right)$$

Measurement

Service Period	Monthly		
Reporting Method	The KPI will be reported by the ESN Service Management System		
Service Hours	Operational Hours	**Permitted Maintenance**	Tier Two Service

Levels mapped to measurement

Severity	Lower Bound % of PSCS Admin Service Availability in Service Period	Upper Bound % of PSCS Admin Service Availability in Service Period	Service Points
Minimum Service Threshold	[…. ✂ ….]		
Minor KPI Failure			
Serious KPI Failure			
Severe KPI Failure			
KPI Service Threshold			
Weighting Factor		**100%**	

This document is based on Schedule 2.2 of the Crown Commercial Services Model Services Agreement v1.0 and has been adapted for use by the Emergency Services Mobile Communications Programme.

© Crown copyright

This document is based on Schedule 2.2 of the Crown Commercial Services Model Services Agreement v1.0 and has been adapted for use by the Emergency Services Mobile Communications Programme.

© Crown copyright

25.1.34 Service Request Fulfilment Efficiency

Service Request Fulfilment Efficiency	***SPI***	***USS12***

Definition

This measures the compliance of the Supplier with the Service Requests Fulfilment process and agreed time frames (as defined in the ESN Service Catalogue) for Service Requests in each Service Period.

Type A means a request for fulfilment from the ESN Service Catalogue and delivered by the

ESN Service Management System

Type B means a request for fulfilment from the Master Catalogue Service

Calculation

The Supplier shall record the following information for each Service Request:

(a) time and date at which the Service Request was made; and

(b) time and date at which the Service Request was fulfilled,

and whether for each Service Request fulfilled the Service Request was fulfilled within the timeframes and in accordance with such process agreed under this Agreement with the Authority for the fulfilment of Service Requests.

Any Service Request (whether a Type A or a Type B) not fulfilled in Service Period outside the agreed timescale and process shall accrue Service Points as follows:

Type A: $100 * \frac{\sum Service\ Requests\ fulfilled\ within\ the\ agreed\ timeframe\ and\ process}{\sum Total\ Service\ Requests\ due\ to\ be\ fulfilled\ within\ Service\ Period}$

Type B: $100 * \frac{\sum Service\ Request\ within\ the\ agreed\ timeframe\ and\ process}{\sum Total\ Service\ Requests\ due\ to\ be\ fulfilled\ within\ Service\ Period}$

Measurement

Service Period	Monthly		
Reporting Method	This will be reported by the Supplier records and Performance Monitoring (from the Supplier Solution).		
Service Hours	*Operational Hours*	**Permitted Maintenance**	*Tier One Service*

This document is based on Schedule 2.2 of the Crown Commercial Services Model Services Agreement v1.0 and has been adapted for use by the Emergency Services Mobile Communications Programme.

© Crown copyright

Levels mapped to measurement

Severity	Lower Bound % of Service Requests Completed on Time in Service Period	Upper Bound % of Service Requests Completed on Time in Service Period	Service Points
Minimum Service Threshold	[…. ✂ ….]		
Minor KPI Failure			
Serious KPI Failure			
Severe KPI Failure			
KPI Service Threshold			
Weighting Factor		**50%**	

This document is based on Schedule 2.2 of the Crown Commercial Services Model Services Agreement v1.0 and has been adapted for use by the Emergency Services Mobile Communications Programme.

© Crown copyright

25.1.35 Reporting Application Availability

Reporting Application Availability	***SPI***	***USA8***

Definition

This measures Availability of the Reporting Application (supplied via the ESN Self Service Interface)

Calculation

The Availability in minutes shall be rounded to the nearest minute for the Service Period shall be calculated as:

$$100 * \left(\frac{\sum Reporting\ Application\ Availablity\ in\ minutes\ during\ Service\ Period}{\sum Minutes\ \ in\ the\ Service\ Period} \right)$$

Measurement

Service Period	Monthly		
Reporting Method	The Performance Indicator will be reported by the ESN Service Management System		
Service Hours	Operational Hours	**Permitted Maintenance**	Tier Two Service

Levels mapped to measurement

Severity	Lower Bound % of Reporting Application Availability in Service Period	Upper Bound % of Reporting Application Availability in Service Period	Service Points
Minimum Service Threshold	[….✂….]		
Minor KPI Failure			
Serious KPI Failure			
Severe KPI Failure			
KPI Service Threshold			
Weighting Factor		**50%**	

This document is based on Schedule 2.2 of the Crown Commercial Services Model Services Agreement v1.0 and has been adapted for use by the Emergency Services Mobile Communications Programme.

© Crown copyright

25.1.36 Data Processing and Transfer Service Availability

Data Processing and Transfer Service Availability	***SPI***	***USA9***

Definition

This measures Availability of the elements of the Supplier solution that perform the processing and transfer of data

Calculation

Availability shall be calculated in minutes shall be rounded to the nearest minute for the Service Period as follows:

$$100 * \left(\frac{\sum \text{ Data Processing and Transfer ServiceAvailablity in minutes during Service Period}}{\sum \text{Minutes in the Service Period}} \right)$$

Measurement

Service Period	Monthly		
Reporting Method	The Performance Indicator will be reported by the ESN Service Management System		
Service Hours	Operational Hours	**Permitted Maintenance**	Tier Two Service

Levels mapped to measurement

Severity	Lower Bound % of Data Processing and Transfer Service Availability in Service Period	Upper Bound % of Data Processing and Transfer Service Availability in Service Period	Service Points
Minimum Service Threshold	[…. ✂ ….]		
Minor KPI Failure			
Serious KPI Failure			
Severe KPI Failure			
KPI Service Threshold			
Weighting Factor		**50%**	

This document is based on Schedule 2.2 of the Crown Commercial Services Model Services Agreement v1.0 and has been adapted for use by the Emergency Services Mobile Communications Programme.

© Crown copyright

This document is based on Schedule 2.2 of the Crown Commercial Services Model Services Agreement v1.0 and has been adapted for use by the Emergency Services Mobile Communications Programme.

© Crown copyright

25.1.37 Subscription Provisioning and Management Service Availability

Subscription Provisioning and Management Service Availability	***SPI***	***USA10***

Definition

This measures Availability of the Subscription Provisioning and Subscription (SIM) Management Services .

Subscription Provisioning Availability is to be measured during Operational Hours whereas Subscription (SIM) Management Availability is to be measured only during Business Hours.

Calculation

Availability shall be calculated in minutes shall be rounded to the nearest minute for the Service Period and shall be calculated as follows:

Where Subscription Provisioning and Subscription (SIM) Availability % is calculated as:

Type A

$$100 * \left(\frac{\sum Subscription\ Provisioning\ Availability\ in\ minutes\ during\ Operational\ Hours}{\sum Minutes\ during\ Operational\ Hours\ in\ the\ Service\ Period} \right)$$

Type B:

$$100 * \left(\frac{\sum Subscription\ (SIM)\ Management\ Availability\ in\ minutes\ during\ Business\ Hours}{\sum Minutes\ during\ Business\ Hours\ in\ the\ Service\ Period} \right)$$

:

Measurement

Service Period	Monthly		
Reporting Method	The Performance Indicator will be measured through the ESN Service Management System		
Service Hours	Type A: Operational Hours Type B: Business Hours	**Permitted Maintenance**	Type A: Tier Two Service Type B: Tier Three Service

This document is based on Schedule 2.2 of the Crown Commercial Services Model Services Agreement v1.0 and has been adapted for use by the Emergency Services Mobile Communications Programme.

© Crown copyright

Levels mapped to measurement

Severity	Lower Bound % of Event Logging Service Availability in Service Period	Upper Bound % of Event Logging Service Availability in Service Period	Service Points
Minimum Service Threshold Type A Type B	[….✂….]		
Minor KPI Failure Type A Type B			
Serious KPI Failure Type A Type B			
Severe KPI Failure Type A Type B			
KPI Service Threshold Type A Type B			
Weighting Factor		**50%**	

This document is based on Schedule 2.2 of the Crown Commercial Services Model Services Agreement v1.0 and has been adapted for use by the Emergency Services Mobile Communications Programme.

© Crown copyright

25.1.38 Optional Voice and Data Traffic Recording Service Availability

Optional Voice and Data Traffic Recording Service Availability	***KPI***	***USA11***

Definition

This measures Availability of the optional Voice and Data Traffic Recording Service (VDTRS) (supplied through the ESN Self Service Interface)

Calculation

Availability shall be calculated rounded to the nearest minute for the Service Period as follows:

$$100 * \left(\frac{\sum VDTRS\ Availablity\ in\ minutes}{\sum Minutes\ in\ the\ Service\ Period}\right)$$

Measurement

Service Period	Monthly		
Reporting Method	The KPI will be measured through the ESN Service Management System		
Service Hours	Operational Hours	**Permitted Maintenance**	Tier One Service

Levels mapped to measurement

Severity	Lower Bound % of Voice and Data Traffic Recording Service Availability in Service Period	Upper Bound % of Voice and Data Traffic Recording Service Availability in Service Period	Service Points
Minimum Service Threshold	[…. ✂ ….]		
Minor KPI Failure			
Serious KPI Failure			
Severe KPI Failure			
KPI Service Threshold			
Weighting Factor		**100%**	

This document is based on Schedule 2.2 of the Crown Commercial Services Model Services Agreement v1.0 and has been adapted for use by the Emergency Services Mobile Communications Programme.

© Crown copyright

This document is based on Schedule 2.2 of the Crown Commercial Services Model Services Agreement v1.0 and has been adapted for use by the Emergency Services Mobile Communications Programme.

© Crown copyright

25.1.39 Reference Test Facility Availability

Reference Test Facility Availability	***SPI***	***USA12***

Definition

This measures Availability of the Reference Test Facility (RTF)

Performance Levels KPI USA12 (Reference System Availability) excludes any period when failover testing is being conducted.

Calculation

Availability shall be rounded to the nearest minute for the Service Period and calculated as follows:

$$100 * \left(\frac{\sum RTF\ Aailablity\ in\ minutes\ during\ Business\ Hours}{\sum Minutes\ during\ Business\ Hours\ in\ the\ Service\ Period} \right)$$

Measurement

Service Period	Monthly		
Reporting Method	This will be reported through the ESN Service Management System		
Service Hours	Business Hours	**Permitted Maintenance**	Tier Three Service

Levels mapped to measurement

Severity	Lower Bound % of Reference Test Facility Availability in Service Period	Upper Bound % of Reference Test Facility Availability in Service Period	Service Points
Minimum Service Threshold	[….✂….]		
Minor KPI Failure			
Serious KPI Failure			
Severe KPI Failure			
KPI Service Threshold			
Weighting Factor		**50%**	

This document is based on Schedule 2.2 of the Crown Commercial Services Model Services Agreement v1.0 and has been adapted for use by the Emergency Services Mobile Communications Programme.

© Crown copyright

This document is based on Schedule 2.2 of the Crown Commercial Services Model Services Agreement v1.0 and has been adapted for use by the Emergency Services Mobile Communications Programme.

© Crown copyright

25.1.40 Continued Commercial Compliance

Continued Commercial Compliance	***KPI***	***USC1***

Definition

The Commercial Compliance measure tracks continued compliance with the contractual and commercial obligations as monitored and reported upon across the following 5 SPIs: USS7 and USS9 to USS12 inclusive.

Calculation

The Supplier shall maintain a log of the Service Points accrued SPIs: USS7 and USS9 to USS12 inclusive in the Service Period. Continued Commercial Compliance shall be calculated as follows:

*100 * (∑Service Points accrued for USS7 and USS9 to USS12 inclusive ÷ Maximum Service Points for USS7 and USS9 to USS12 inclusive if the Supplier had reached the KPI Service Threshold in Service Period for each such SPI)*

Measurement

Service Period	*Quarterly*		
Reporting Method	The KPI will be calculated using records maintained as part of contract governance		
Service Hours	*N/A*	**Permitted Maintenance**	*N/A*

Levels mapped to measurement

Severity	Lower Bound SP/%	Upper Bound SP/%	Service Points
Minimum Service Threshold	[…. ✂ ….]		
Minor KPI Failure			
Serious KPI Failure			
Severe KPI Failure			
KPI Service Threshold			
Weighting Factor		**30%**	

This document is based on Schedule 2.2 of the Crown Commercial Services Model Services Agreement v1.0 and has been adapted for use by the Emergency Services Mobile Communications Programme.

© Crown copyright

This document is based on Schedule 2.2 of the Crown Commercial Services Model Services Agreement v1.0 and has been adapted for use by the Emergency Services Mobile Communications Programme.

© Crown copyright

ANNEX 1: Categorisation of Services, Services Hours, Permitted Maintenance and Recovery Priority

For the avoidance of doubt, Recovery Priority in terms of RTO is applicable for all elements of services, Recovery Priority in terms of RPO is applicable only for the data held in systems used for deliver these services.

Service	Service Hours	Permitted Maintenance	Recovery Priority
Systems Integration			
Reference Test Facility	Business Hours	Tier Three	Priority Three
Network and IT Infrastructure			
Public Safety Communications			
All Services	Operational Hours	Tier One	Priority One
PSCS Administration Service	Operational Hours	Tier Two	Priority Two
User Device Management			
Network Approval Testing	Business Hours	Tier Three	Priority Three
User Device Management Service	Operational Hours	Tier Two	Priority Two
Customer Support			
Billing	Business Hours	Tier Three	Priority Two Service (RTO) Priority One Service (RPO)
Payment (Collections)	Business Hours	Tier Three	Priority Two Service (RTO) Priority One Service (RPO)
Reporting Application Service	Operational Hours	Tier Two	Priority Two

This document is based on Schedule 2.2 of the Crown Commercial Services Model Services Agreement v1.0 and has been adapted for use by the Emergency Services Mobile Communications Programme.

© Crown copyright

Service	Service Hours	Permitted Maintenance	Recovery Priority
Event Logging Audit Service (recording of information)	Operational Hours	Tier One	Priority One
Voice and Data Recording Service	Operational Hours	Tier One	Priority One
Self Service User Interface	Operational Hours	Tier One	Priority Two
Data Processing and Transfer Service Availability including Coverage	Operational Hours	Tier Two	Priority Two
Subscription Provisioning Service Availability	Operational Hours	Tier Two	Priority Two
Subscription Management Service Availability	Operational Hours	Tier Three	Priority Three
Service Management System	Operational Hours	Tier One	Priority Two
Service Management (People and Processes) **(Note that Planned Maintenance only applicable to the systems that support this service. It is not applicable for the people and processes used to deliver these services)**			
Service Portfolio Management	Business Hours	N/A	Priority Three
Financial Management	Business Hours	N/A	Priority Three
Demand Management	Business Hours	N/A	Priority Three
Business Relationship Management	Business Hours	N/A	Priority Three

This document is based on Schedule 2.2 of the Crown Commercial Services Model Services Agreement v1.0 and has been adapted for use by the Emergency Services Mobile Communications Programme.

© Crown copyright

Service	Service Hours	Permitted Maintenance	Recovery Priority
Business Relationship Management (as point of escalation round the clock)	Operational Hours	Tier One	Priority One
Service Catalogue Management	Business Hours	Tier Three	Priority Three
Service Level Management	Operational Hours	Tier One	Priority Two
Availability Management	Operational Hours	Tier One	Priority Two
Capacity Management	Operational Hours	Tier One	Priority Two
Service Continuity Management	Operational Hours	Tier One	Priority Two
Information Security Management (Implementation and operation of information security management as described in the supplier's Information Security Management System, see Schedule 2.4 Paragraph 3)	Operational Hours	Tier One	Priority One
Supplier Management	Business Hours	N/A	Priority Three
Change Management (non emergency)	Business Hours	Tier Three	Priority Two
Change Management (Emergency Change)	Operational Hours	Tier One	Priority One
Change Management (Co-ordination with Release and Deployment Management as required at point of deployment)	Ad Hoc	N/A	Priority Two
Asset and Configuration Management	Operational Hours	Tier Two	Priority Two

This document is based on Schedule 2.2 of the Crown Commercial Services Model Services Agreement v1.0 and has been adapted for use by the Emergency Services Mobile Communications Programme.

© Crown copyright

Service	Service Hours	Permitted Maintenance	Recovery Priority
Release and Deployment Management	Ad Hoc	N/A	Priority Two
Service Validation and Testing Management	Ad Hoc	N/A	Priority Two
Knowledge Management	Business Hours	Tier Three	Priority Three
Service Incident Management	Operational Hours	Tier One	Priority One
Problem Management	Business Hours	Tier Three	Priority Three
Service Event Management	Operational Hours	Tier One	Priority Two
Service Request Fulfilment Service	Operational Hours	Tier Two	Priority Two
Access Management	Operational Hours	Tier One	Priority Two
Planned Maintenance	Operational Hours	N/A	Priority Three
Supplier Service Desk	Operational Hours	Tier One	Priority One
End-to-end Service Management (The end to service management process and procedures, across Other ESN suppliers for the purpose of provision of Services)	Operational Hours	Tier One	Priority One

This document is based on Schedule 2.2 of the Crown Commercial Services Model Services Agreement v1.0 and has been adapted for use by the Emergency Services Mobile Communications Programme.

© Crown copyright