SHELL EXPANSION AFT SHIP

SHELL EXPANSION FORE SHIP

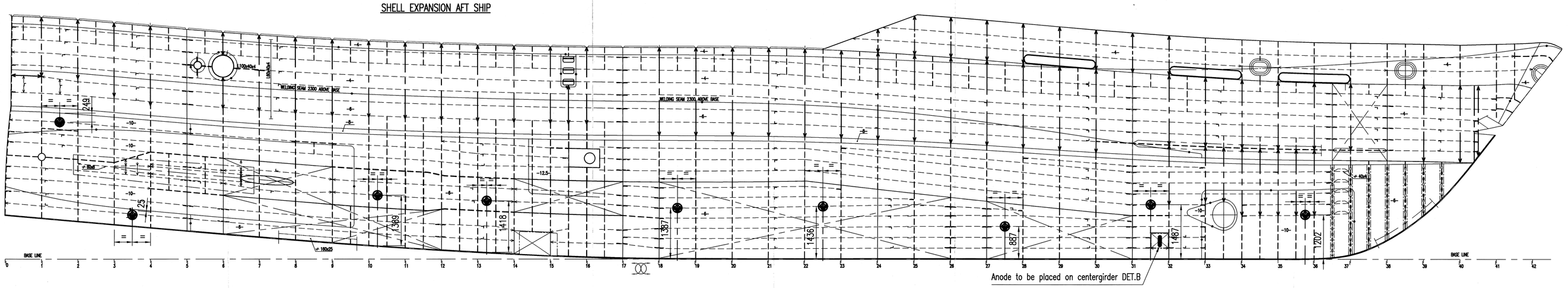

SB VIEW

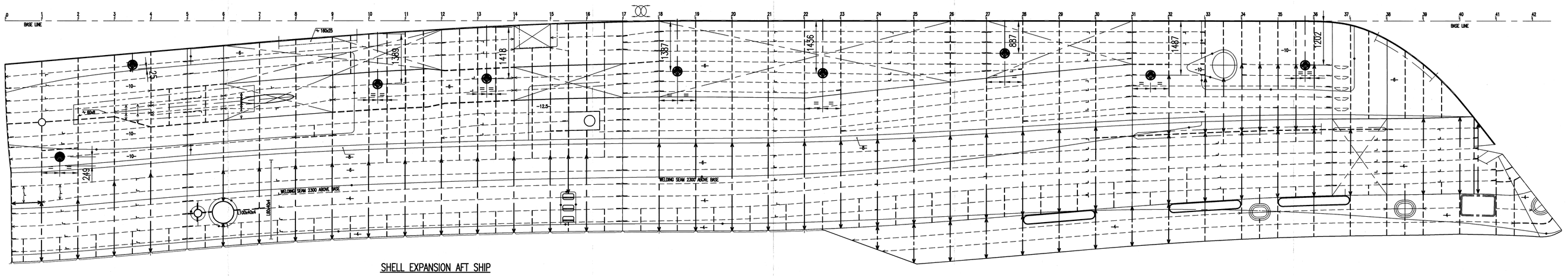

PS VIEW

SHELL EXPANSION AFT SHIP

SHELL EXPANSION FORE SHIP

DETAIL A

SCALE 1:2
ALUMINIUM DISCS (MME28AD) ø230x25 mm
18 PCS TO BE PLACED

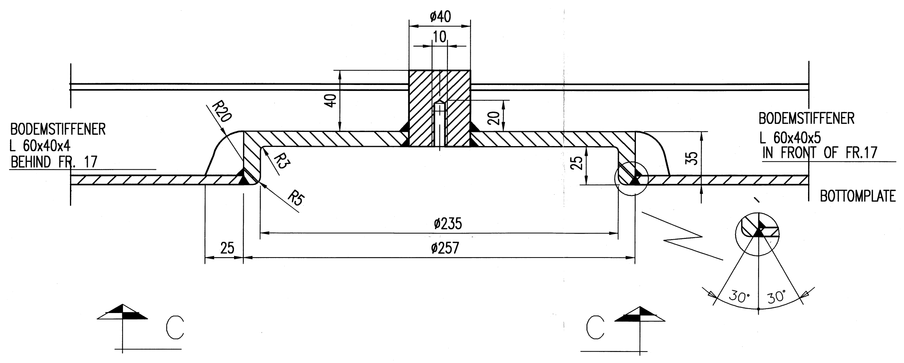

VIEW C

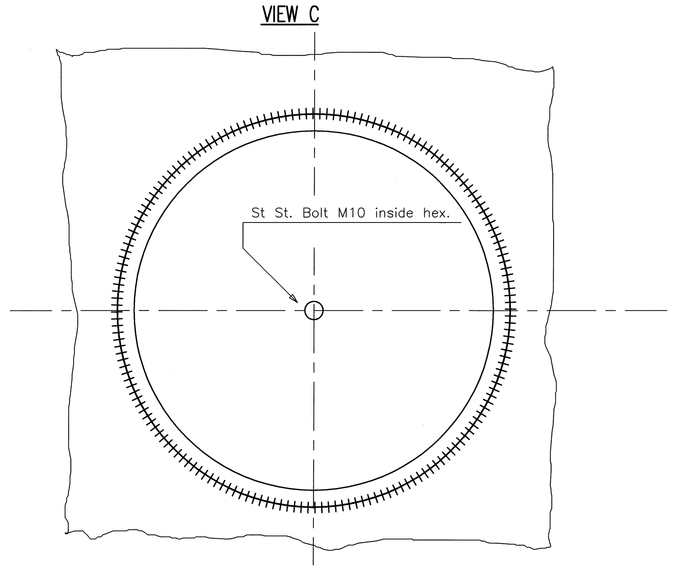

MATERIAL: STEEL

WEIGHT:: 6.7 Kg PER PIECE + DISC 2.9 Kg PER PIECE

DETAIL B

SCALE 1:2
ALUMINIUM HULL ANODES (MME26A) WITH STEEL INSERT
ANODES TO BE WELDED TO DOUBLE PLATES
9 PCS TO BE PLACED

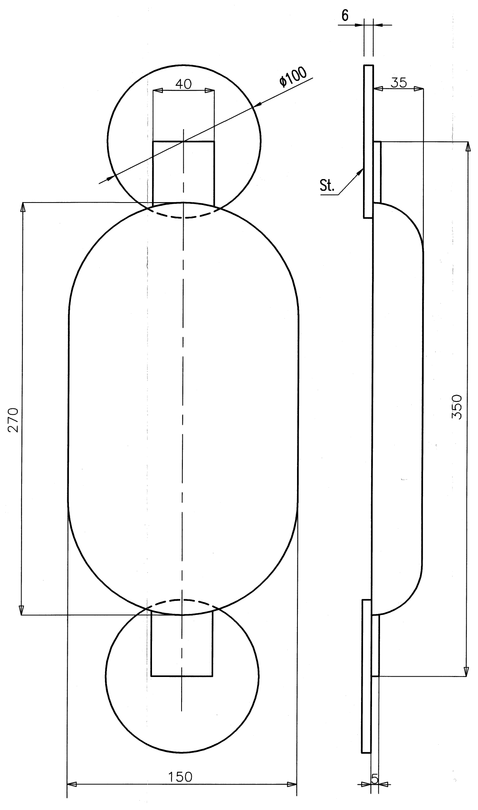

MATERIAL: ALUMINIUM

WEIGHT: 3.2 Kg PER PIECE

AFT VIEW STERN DOOR

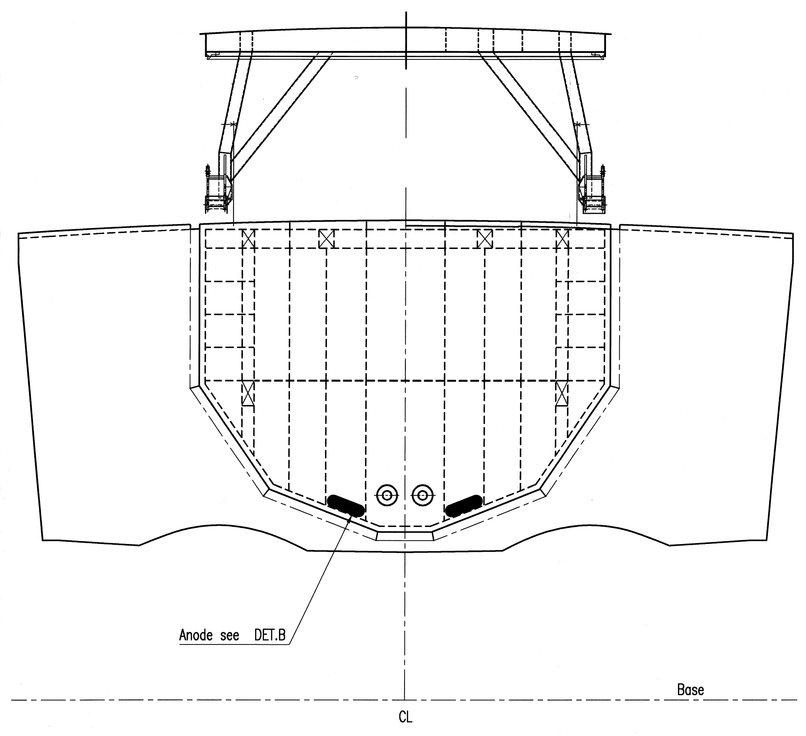

NOTE:
HULL ANODES TO BE PLACED ON DOUBLE PLATE T=6mm
9 PIECES TO BE PLACED AS FOLLOWS:
1 IN EACH SEA CHEST
4 IN BOWTHRUSTER TUNNEL
1 IN SEA CHEST FIREPUMP
2 ON STERNDOOR
DESIGN LIFE: 2 YEARS
ANODE SUPPLIER " MATERIAAL METINGEN"
MATERIAL: ALUMINIUM
ANODE RECESSES SHOULD BE CLEAN AND GREESFREE BEFORE THE ANODES ARE FITTED
A PROPELLER SHAFT EARTHING SYSTEM MME105 SHAFTDIAMETER 167mm
SHARP EDGES TO BE GRINDED SMOOTH
ALL WELDING ◿5.3
FRAME SPACING 1000 mm

rev.	date	name	checked	revision subject
B	30-08-2000	IS	HvH	Shell expansion updated ,dimensions added
A	14-07-2000	P.Len.	HvH	ANODE REPLACED

approved	date

The information and data contained herein are proprietary to Damen Shipyards and are not to be copied, reproduced, duplicated or disclosed to others, in whole or in part without prior written consent of Damen Shipyards.

DAMEN SHIPYARDS
Avelingen West 20 – 4202 MS Gorinchem
P.O.Box 1 – 4200 AA Gorinchem
Holland
Tel. : + 31-183-639911*
Telefax : + 31-183-632189
Telex : 25335 dame nl

Stan Patrol

CATHODIC PROTECTION

drawn : IS	date : 30-05-2000	scale : 1:50	
checked : HvH	ident. to dwg. no. :		
yard no. : 549852	derived fr. dwg. no. :		
ACAD Drawing not to be revised manually	dwg. no. : 549852-163-001		

0cm 5 10cm