Kimberley Park Community Stage

(1:50)

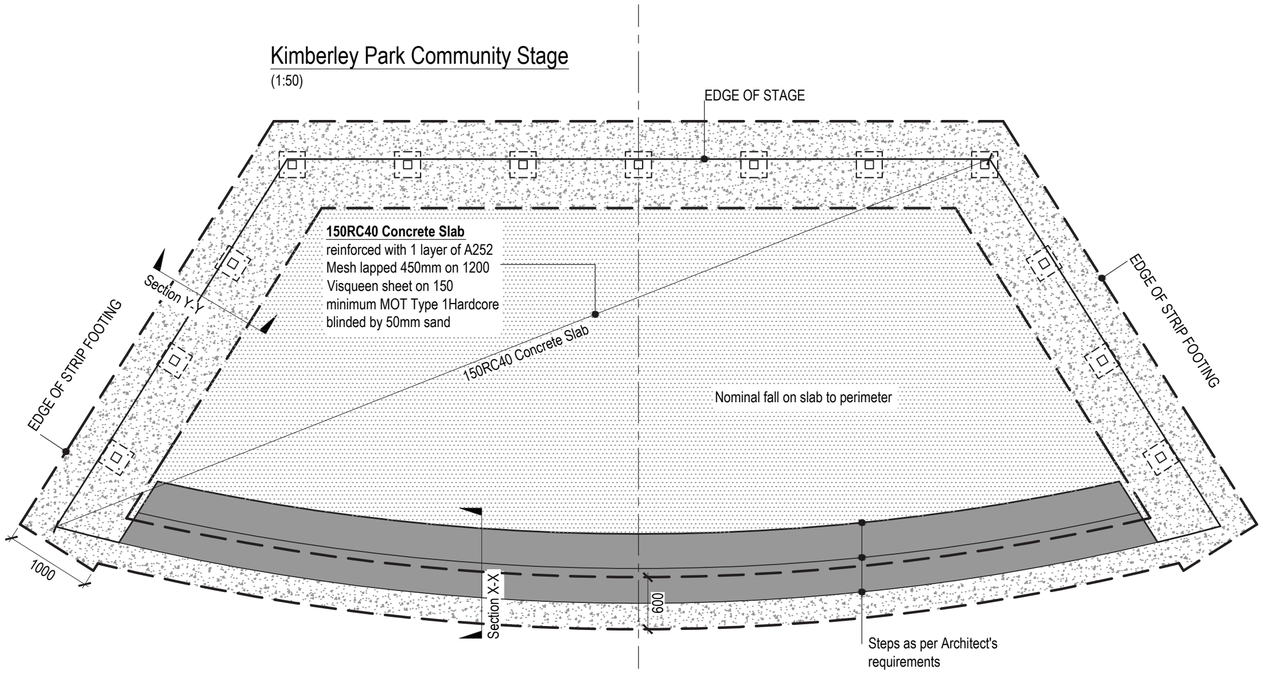

FOUNDATION PLAN

Layout based on Marraum
Architects dwg No. P3.5

Concrete Specification

1. All concrete works to be to current edition of BS 8110.
2. Concrete to be designated mix RC 40.
3. Minimum cement content to be 300 kg/m³.
4. Water cement ratio to be 0.5.
5. Cover to reinforcement to be 50 mm.
6. Contractor to supply chairs and spacers to maintain specified cover to reinforcement.
7. Reinforcement in top of slab to be A252 mesh to BS 8666:2000.
8. Mesh reinforcement to be overlapped minimum 450 mm.
9. Mesh reinforcement should be continuous. Lapped 450mm at joints in sheets. No construction joints are anticipated except for edge strip.
10. For finishes refer to Architects specifications.

Section Y-Y
Concrete Slab Section showing Post Connection

(1:15)

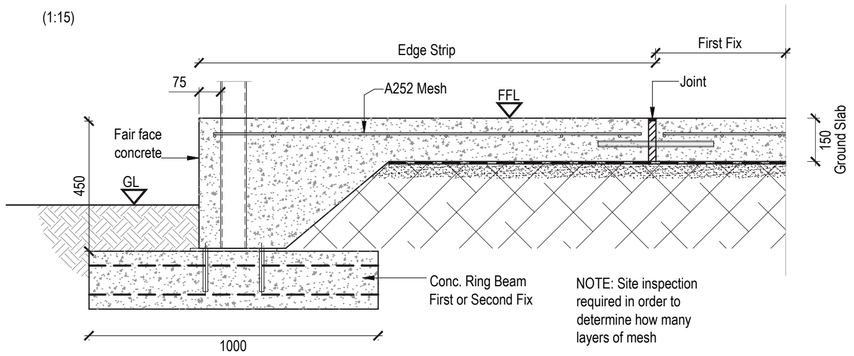

Section X-X
Concrete Slab Section at Steps

(1:15)

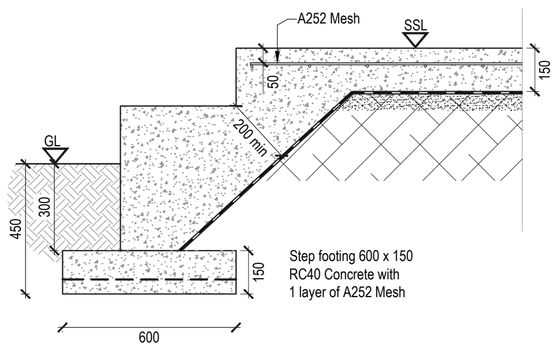

DO NOT SCALE

NOTES:-

1. All dimensions are in mm unless otherwise stated.

2. For all set out dimensions refer to Architects or Steel Contractors Drawings. South Lincs Consulting are not responsible for dimensional coordination between the superstructure and foundations. On steel framed buildings it is imperative that a survey of holding down bolt lines and levels is carried out prior to cutting columns. On extensions this survey should relate to a datum fixed at the top of the existing stanchion not existing floor level.

3. This drawing should be read in conjunction with all relevant Architects and Steel Contractors drawings, Engineers calculation sheets and all other relevant contract specification. Steel Contractors should check Foundation GA's where applicable and any discrepancies should be reported back to South Lincs Consulting.

4. The Steel Contractor should submit GA drawings to South Lincs Consulting at least one week prior to fabrication for cross checking. However this does not relieve the Steel Contractors of their responsibility for the accuracy of their drawings.

Rev	Date	Description	By

SLC
Unit 1
Kernick Industrial Estate
Parkengue
Penryn, Cornwall
TR10 9EP
T: 01326 375337
E: andrew@southlincsconsulting.com

Client:
Falmouth Town Council

Project Title:
Kimberley Park Community Stage
Kimberley Park
Falmouth

Drawing Title:
Foundation Plan

Issue:
FOR COMMENT

Project Ref:	Dwg No:	Revision:
14-0118	01	

Drawn:	Date:	Checked:	Date:
AK	JUN14	SK	JUL14

Scale:
As stated

© Copyright of South Lincs Consulting