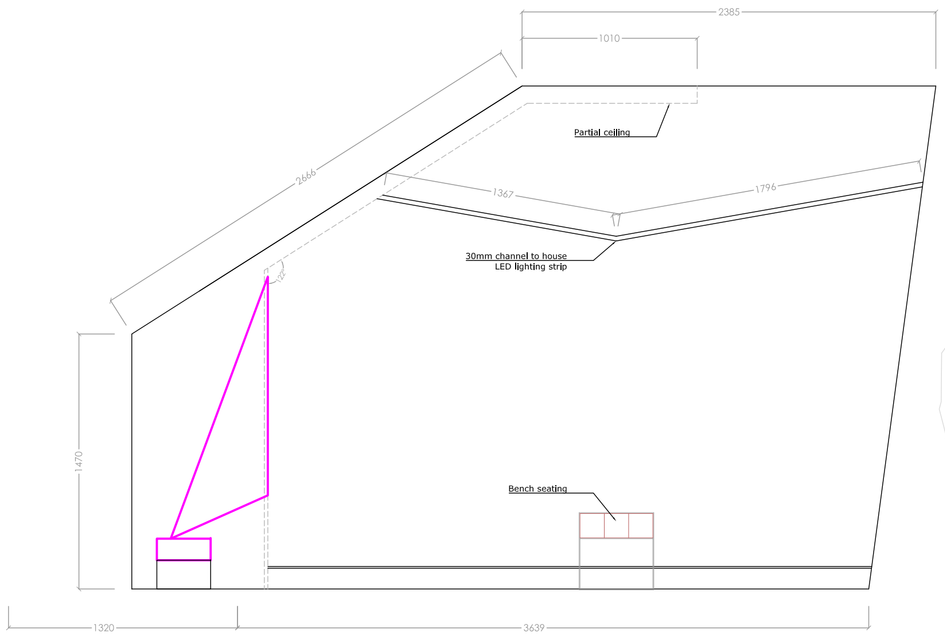

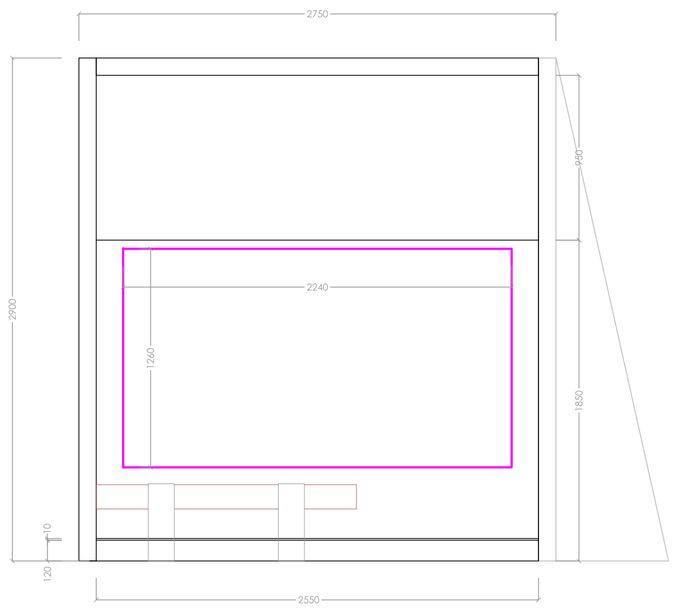

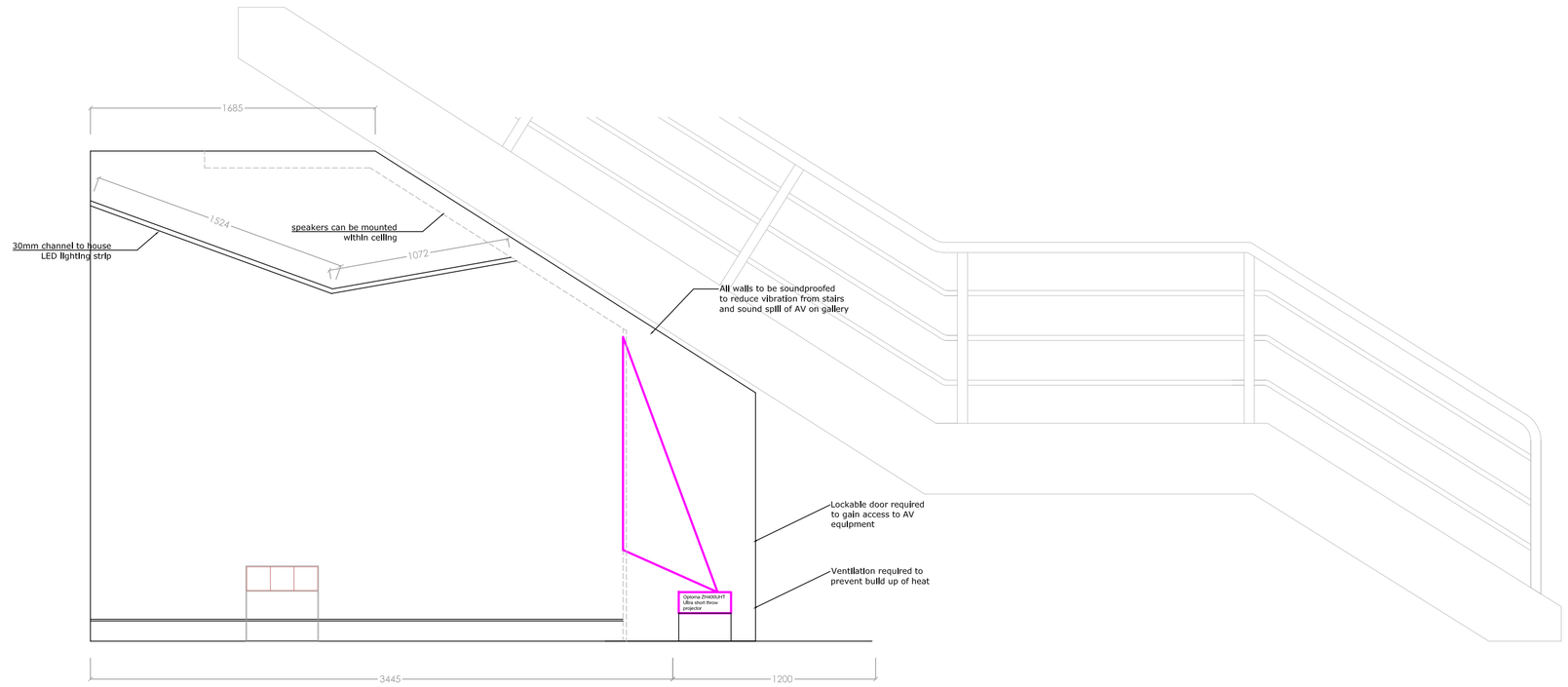

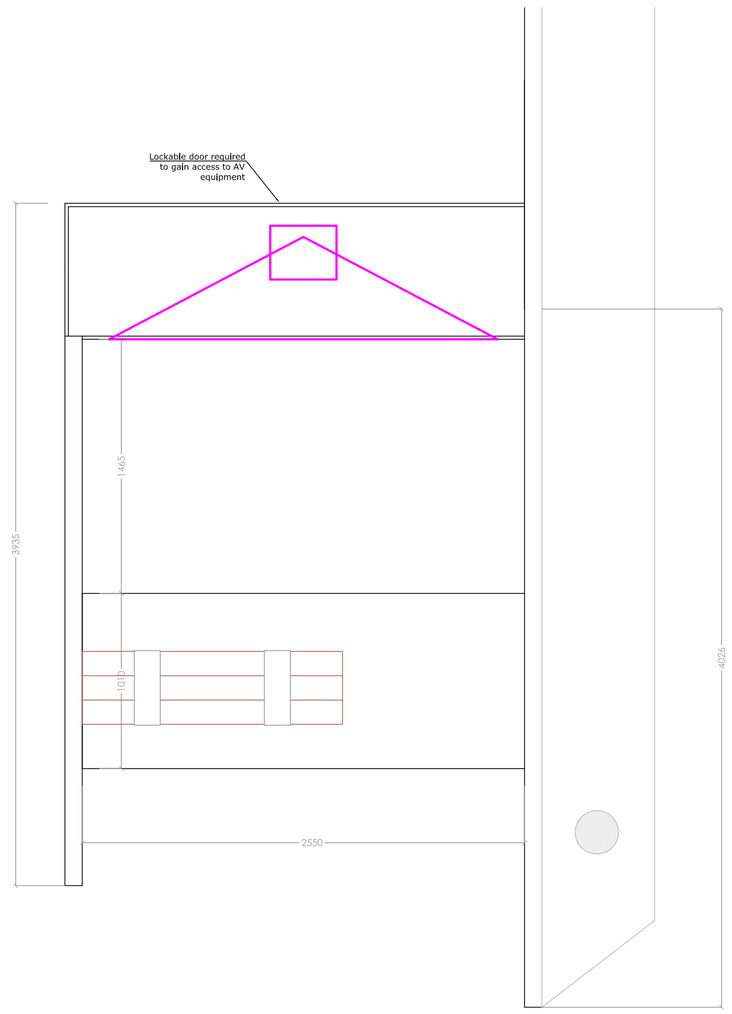

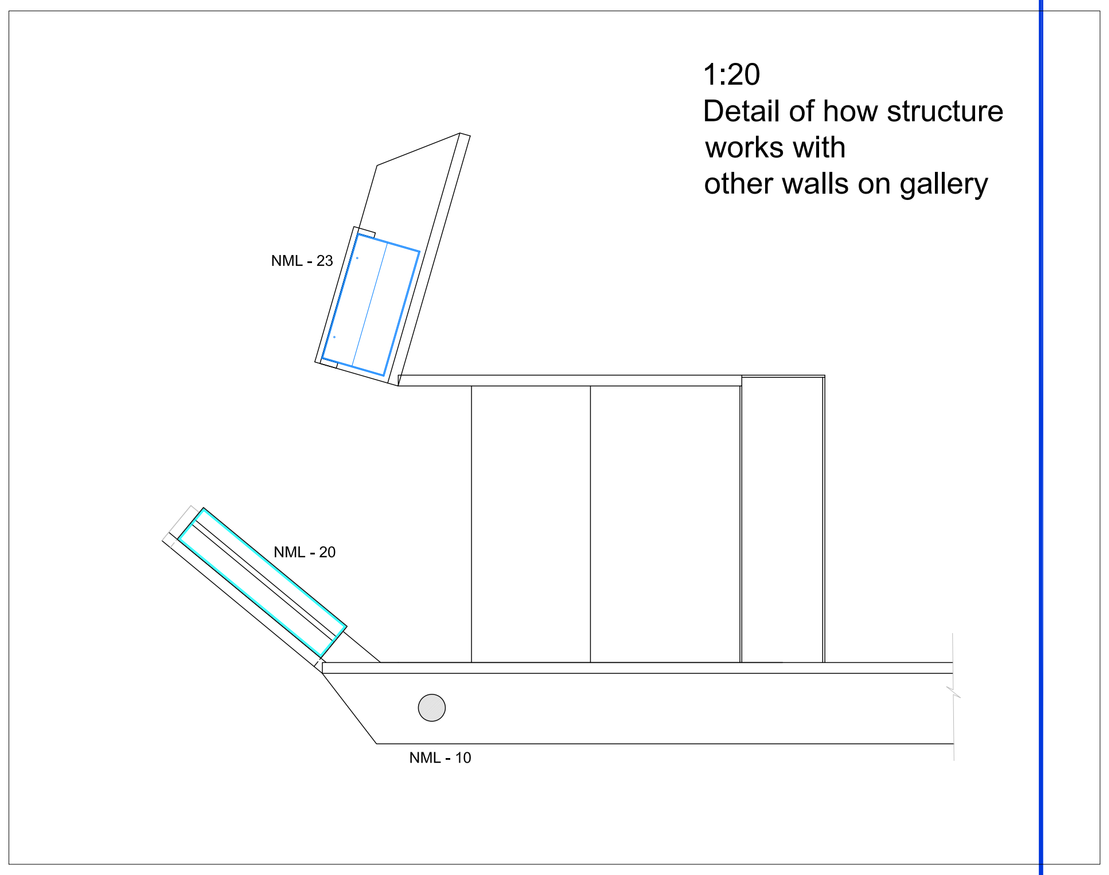

Revision	Details	Name and Date

Address / Scheme
Merseyside Maritime Museum

Title Sea Galleries
Campaigning & Environment

Floor 2

Drawing Number
NML - 22 /Room

Revision

	Scale	Date	Drawn	Status
A1	1:25	04.02.19	VS	

NATIONAL MUSEUMS LIVERPOOL

national museums liverpool 127 dale street liverpool L2 2JH