Proposed Control Room Electrical Services Layout.

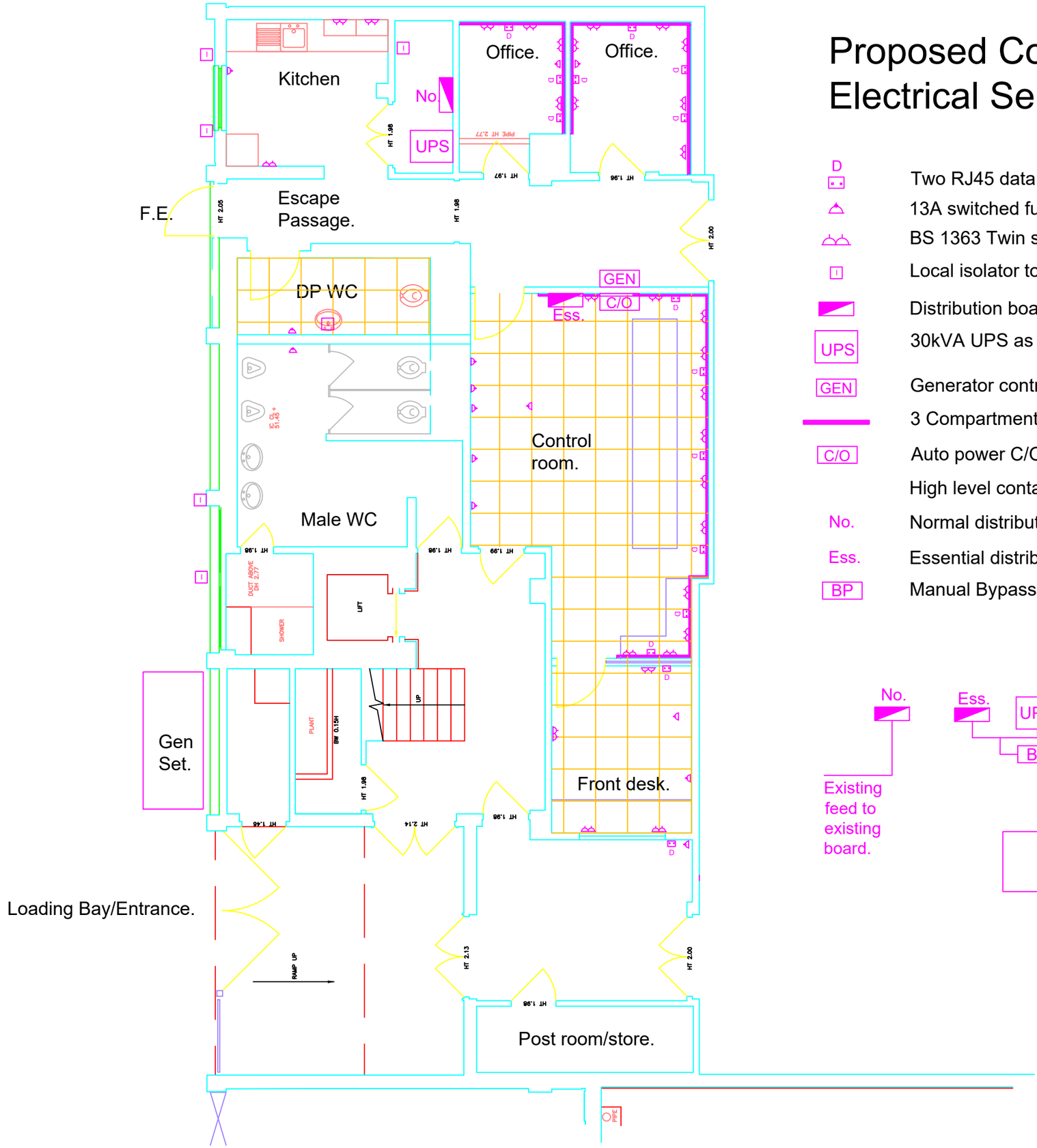

D — Two RJ45 data outlet in trunking or surface.

13A switched fused spur.

BS 1363 Twin switched socket outlet trunking or suface fixed.

Local isolator to suit application. External to be weatherproof.

Distribution board

UPS — 30kVA UPS as per quotation.

GEN — Generator control panel.

3 Compartment Dado trunking.

C/O — Auto power C/O panel.

High level containment.

No. — Normal distribution board.

Ess. — Essential distribution board.
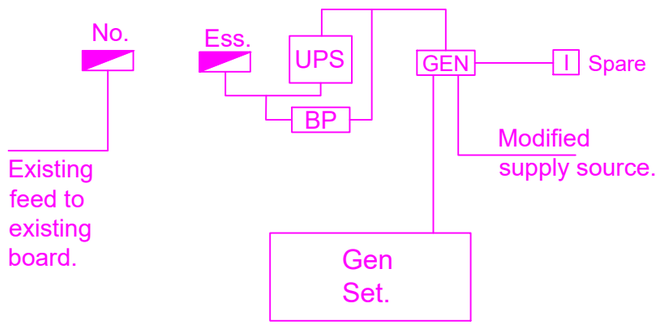
BP — Manual Bypass.