DO NOT SCALE FROM THIS DRAWING

This drawing is the copyright of Rhodes & Partners and must not be copied or passed to a third party without consent of the company.

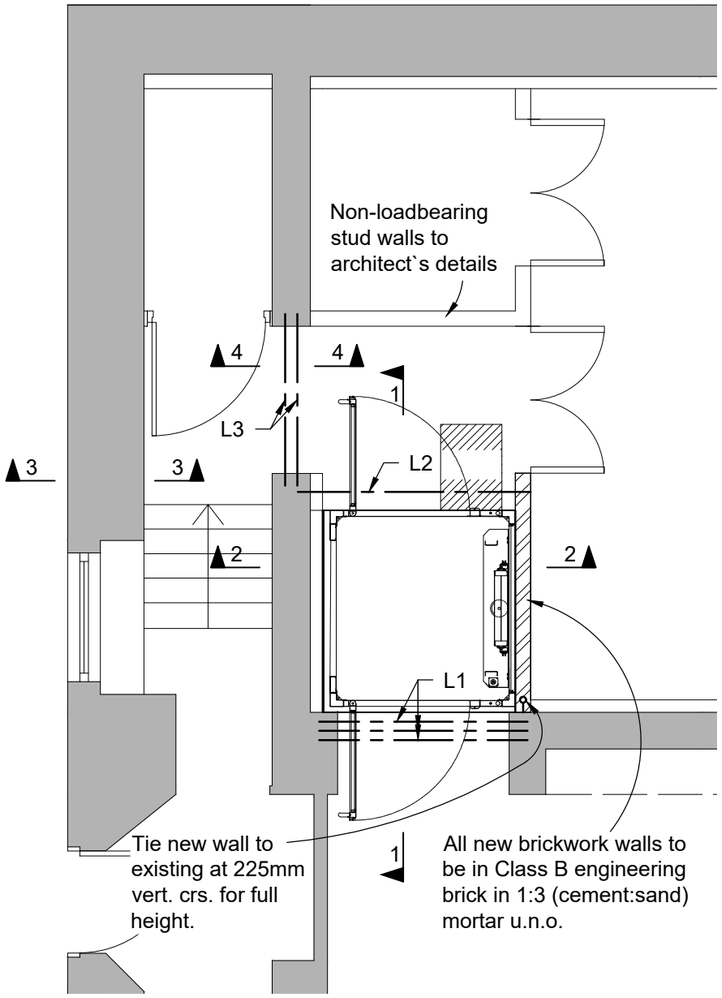

Basement Plan
[Scale 1:50]

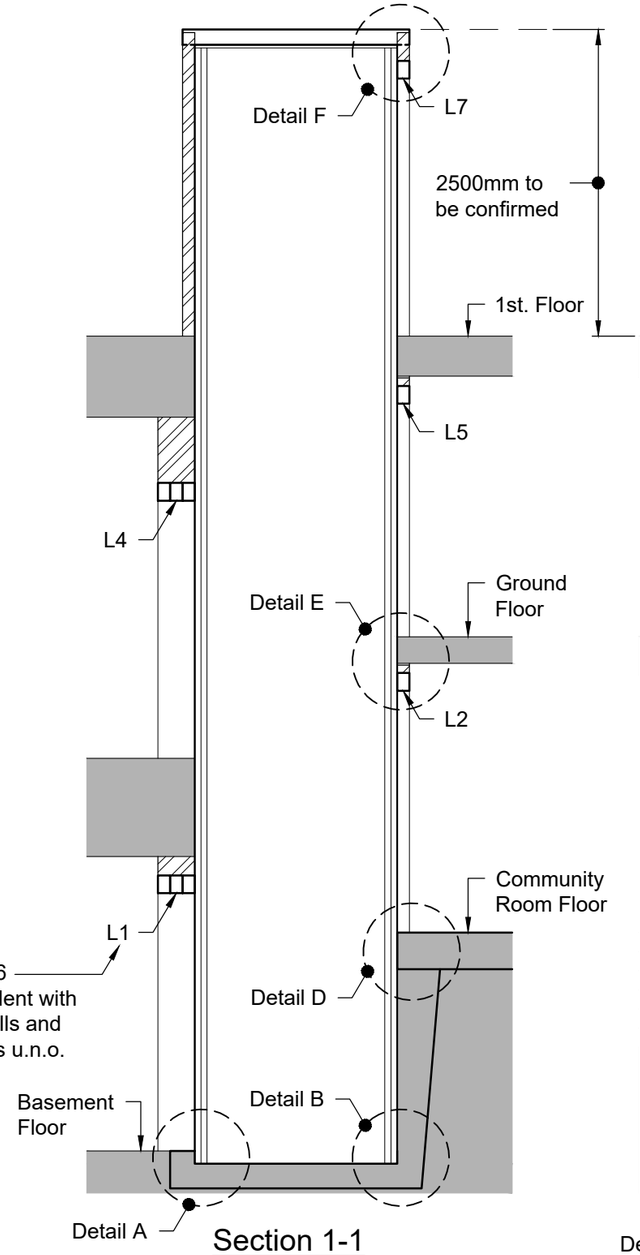

Section 1-1
[Scale 1:50]

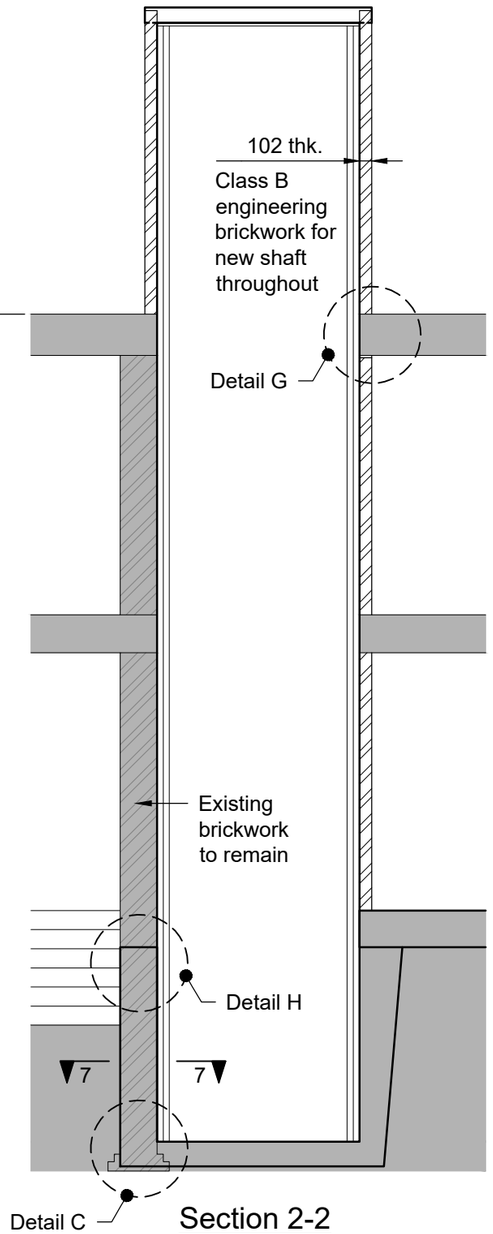

Section 2-2
[Scale 1:50]

1m 0 1m 2m 3m 4m 5m
1:50

SUGGESTED LIFT SHAFT CONSTRUCTION SEQUENCE:

1. Cut through Community Room Floor for lift shaft opening.
2. Cut through lower Basement wall (from Library) for lift shaft wall opening.
3. Construct shaft Basement Floor and underpinning walls to Basement in minimum 3 No. stages.
4. Construct new shaft walls from Basement and pack to underside of Ground Floor construction.
5. Cut through Ground Floor and locally remove for lift shaft opening.
6. Repeat 4 + 5 for Ground to First Floor.
7. Complete lift shaft construction.

Construction Notes:

For all Construction Notes please refer to Rhodes and Partners drawing D26536-102.

Rev	Description	By	Chkd	Date
A	Detail H-H + section 7-7 added.	DB	PRG	13/11/2023

Drawing Status:
-

Rhodes &partners
Consulting Civil and Structural Engineers
Suite 4, Marple House, 39 Stockport Road, Marple, Stockport SK6 6BD
t:0161 427 8388 e:office@rhodesandpartners.co.uk

Client:
High Peak Architects Ltd

Project:
The Mechanics Institute, Whaley Bridge
SK23 7AA

Drawing Title:
Lift Installation Structural Details
- Sheet 1

Drawn By:	Checked By:	Date:	Scale:
DB	PRG	01/06/2023	As shown on A3

Drawing No:	Revision:
D26536-101	A