AURA

Stylish and contemporary, the Aura™ decorative flykiller is an ultra discreet unit designed for front-of-house applications.

Ideal for use within cafes, restaurants, bars and hotels, the Aura™ offers an elegant, modern aesthetic alongside innovative, easy-to-service features and maximum efficacy. **The unique circular registered design of the unit allows light to attract flying insects from a full 360° around the unit**, attracted by the patented Synergetic® green light, whilst the design of the discreetly positioned glueboard gives a 100% useful glue area which remains hidden from customer view.

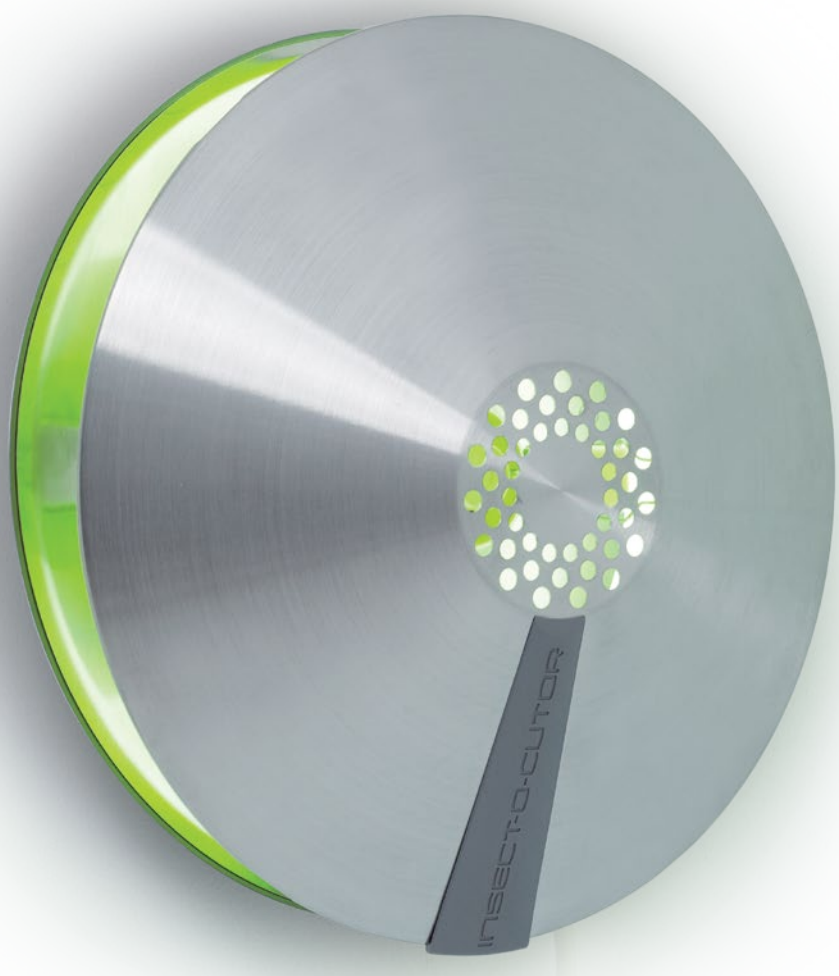

View the Aura promotional video by scanning the QR code

CONTEMPORARY, EFFECTIVE AND ULTRA DISCREET

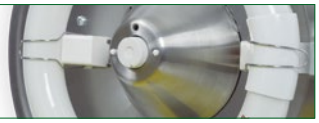

aura AURA

FEATURES

- Contemporary detailing and elegant clean lines
- Beautifully polished facade
- Slim design ensures that the unit is unobtrusive
- Ultra discreet fly catching glueboard hidden from view
- 100% useful glueboard area ensures maximum efficacy
- Ensures compliance with food hygiene legislation and protects clientele from flying pests
- Patented dual wavelength Synergetic® technology for an increased catch
- Easy tool free access and efficient servicing
- Quick and simple IEC mains socket, or discreet hard wiring option
- Robust stainless steel and UV stable polycarbonate construction

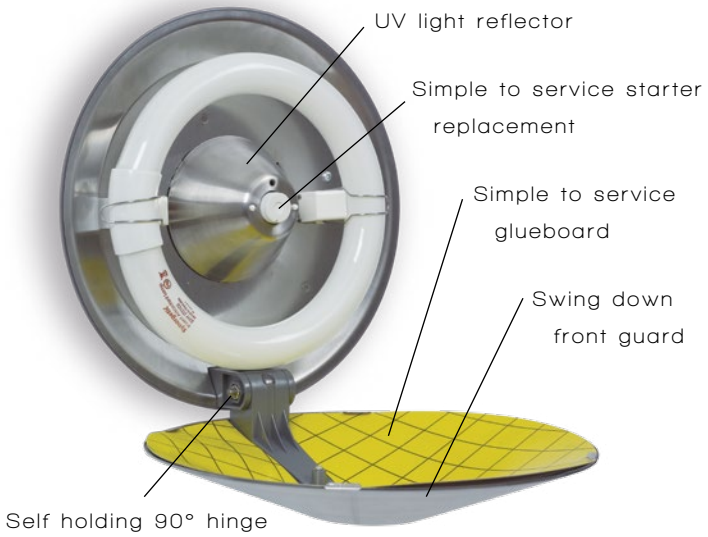

PRODUCT CODE	ZL051
DESCRIPTION	Aura, 22 Watt
DIMENSIONS (MM) H x W x D	270 x 270 x 135
COVERAGE (M²)	40
TUBES	1 X TGX22
GLUEBOARDS	1 x INL198
WEIGHT (KG)	1.9

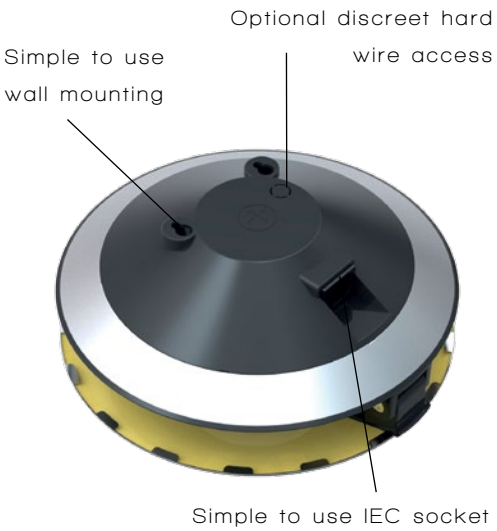

ROOM COVERAGE
40 m²

APPLICATION
Front of House

Registered design 001245542-002

OE8109 - Opus 800 Electric Counter-top Chip Scuttle - W 400 mm - 1.5 kW

Keep your chips wonderfully crisp and fresh with the Opus 800 Electric Chip Scuttle with gantry.

- Keep chips and other deep-fried products in perfect condition with heat from above and below
- Deep-fried products are kept fresh and crisp with the removable perforated fat drain plate
- Removable 1/1 GN chip container with perforated fat drain plate is quick and easy to clean

Specifications

Summary

Range Name	Opus 800
Power Type	Electric
Unit Type	Counter-top
Available in UK Only	No
UK Warranty	2 Years Parts and Labour Warranty
Export Warranty	Contact your local dealer
GTIN Code	5056105102496

Power and Performance

Gastronorm Capacity	1 x GN1/1
Total Power kW	1.5
IP Rating	IP24
Temperature Control	Mechanical

Key Specifications

Heated Base	Yes
Heated Gantry	Yes

Weights and Dimensions

Unit Height (External) mm	825
Unit Width (External) mm	400
Unit Depth (External) mm	800
Net Weight Kg	34.5

Supply Connections

Requires Installation	No
Requires Electrical Supply	Yes
UK 3 Pin Plug	Yes
Requires Hardwiring	No
Electrical Supply Rating Watts	1,500
Single Phase Amps	6.5
Single Phase Voltage	230

Shipping

Packed Weight Kg	47.5
Packed Height cm	90
Packed Width cm	85
Packed Depth cm	45

Available Accessories

LK11	OPUS 800 LONG LEG KIT
OA8921	Opus 800 Free-standing Floor Stand with Legs - for units W 400 mm
OA8926	GASTRONORM & LID
OA8927	GASTRONORM & LID
OA8928	GASTRONORM & LID
OA8971	Opus 800 Free-standing Pedestal with Doors and Legs - for units W 400 mm

Technical Picture

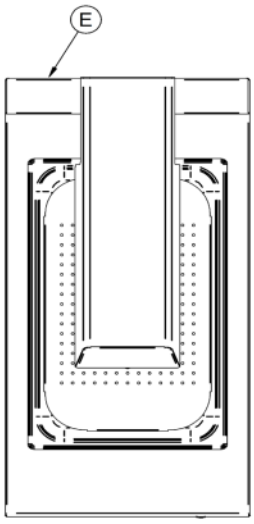

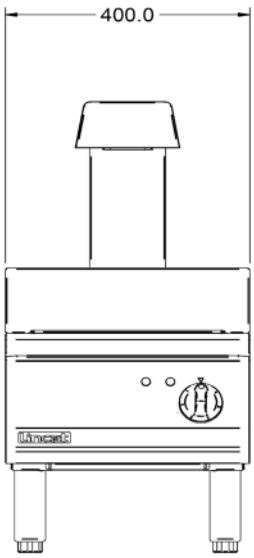

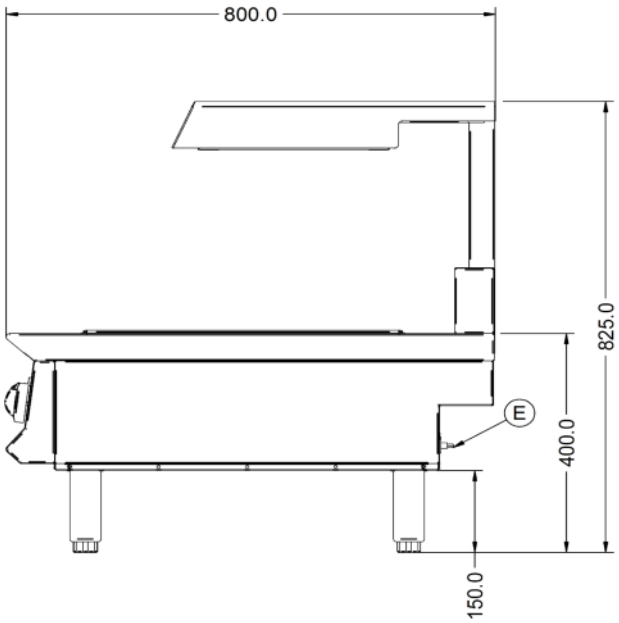

Lincat Limited
Whisby Road,
Lincoln, LN6 3QZ,
United Kingdom
Company No: 2175448

Customer Care
Tel: +44 1522 875500
Email: care@lincat.co.uk

Export Customers
Tel: +44 1522 503250
Email: export@lincat.co.uk

Opening Hours
Monday – Friday:
8.30am – 5pm

A member company of
THE MIDDLEBY CORPORATION

Project _____

Item # _____

Quantity _____

Round Heated Wells

Models: RHW-1, -2, -1B

Hatco's Round Heated Well is a multi-purpose, insulated, dry well that offers the flexibility of being a foodwarmer, soup kettle, Bain-Marie heater, steamer and pasta cooker all in one.

Heat is evenly distributed throughout the unit to hold foods at desired temperatures, and the insulated, stainless steel design provides easy maintenance and durable performance. The heating element temperature is monitored by an electronic controller for optimum results.

Standard features

- Standard 11 quart (10 liters) well(s), available in free-standing or built-in, single or dual model
- Three temperature setpoints from 122° to 212 F° (50° to 100° C) for warming, steaming and boiling
- The insulated, stainless steel design offers easy maintenance and durable performance
- An energy saving low power mode during off-peak hours
- RHW-1 shipped with one food holding pan and one pan lid
- RHW-2 shipped with two food holding pans and two pan lids
- RHW-1B shipped with one food holding pan, one pan lid, and remote control
- Built-In recommended well cut-out size: 11.875 (300 mm) diameter

Accessories (available after purchase)

☐ Hinged Lid for 11-Quart (10 Liter) Round Pan

☐ 11-Quart (10 Liter) Round Pan

ANSI/NSF 4

HATCO CORPORATION | P.O. Box 340500 Milwaukee, WI 53234-0500 U.S.A.

(800) 558-0607 | (414) 671-6350 | www.hatcocorp.com | equipsales@hatcocorp.com | intlsales@hatcocorp.com

Round Heated Wells

Models: RHW-1, -2, -1B

RHW-1

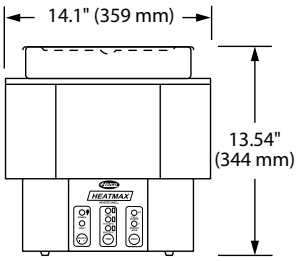

Front View

RHW-2

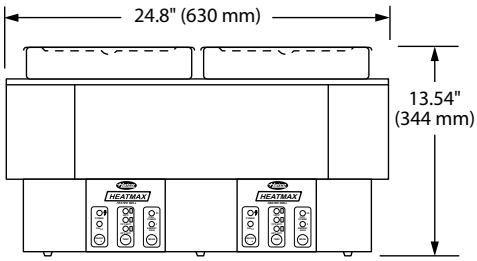

Front View

RHW-1B

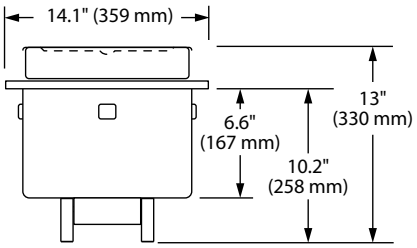

Front View

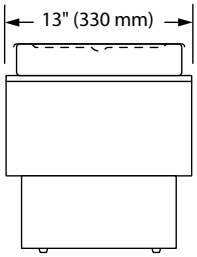

Side View

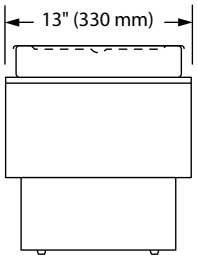

Side View

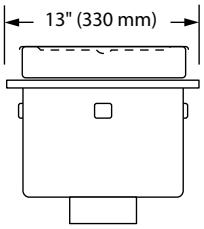

Side View

Control Box Cut Out Dimensions

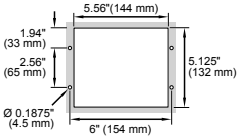

The electrical cord between the unit and the control box is 56" (1420 mm) in length

Countertop Opening
("Circular" cut-out)

SPECIFICATIONS
Freestanding Round Heated Wells

Model	Dimensions (Width x Depth x Height)	Volts (single phase)	Watts	Amps	Plug	Cord Location	Ship Weight*
RHW-1	14.1" x 13" x 13.54" (359 x 330 x 344 mm)	120	1250	10.4	NEMA 5-15P	Lower back of unit	21 lbs. (10 kg)
RHW-2	24.8" x 13" x 13.54" (630 x 330 x 344 mm)	208	2045	9.8	NEMA 6-15P	Lower back of unit	38 lbs. (17 kg)
		240	2725	11.3			

Built-In Round Heated Wells

Model	Dimensions (Width x Depth x Height)	Volts (single phase)	Watts	Amps	Plug	Cord Location	Ship Weight*
RHW-1B	14.1" x 13" x 13" (359 x 330 x 330 mm)	120	1250	10.4	NEMA 5-15P	56" (1422 mm) cable from well to control box and a 6' (1829 mm) cord and plug located at the back of the control box	21 lbs. (10 kg)

* Shipping weight includes packaging.

PLUG CONFIGURATIONS

NEMA 5-15P

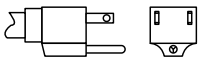

NEMA 6-15P

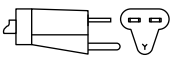

PRODUCT SPECS
Round Heated Wells

The Round Heated Well shall be a Model ….as manufactured by the Hatco Corporation, Milwaukee, WI 53234 U.S.A.

The Round Heated Well shall be rated at ….watts, ….volts, and be ….inches (millimeters) in overall width and be ….inches (millimeters) in overall depth. It shall consist of stainless steel housing that is insulated, a heated well, an electronic temperature control with three heat settings, and a 6' (1829 mm) cord with plug attached. Accessories include 11-quart pan and lid.

Warranty consists of 24/7 parts and service assistance (U.S. and Canada only).

HATCO CORPORATION | P.O. Box 340500 Milwaukee, WI 53234-0500 U.S.A.

(800) 558-0607 | (414) 671-6350 | www.hatcocorp.com | equipsales@hatcocorp.com | intlsales@hatcocorp.com

Product Data Sheet - 1100/D

Basin Tap

Specification:

- WRAS approved basin tap
- Deck Mounted
- Single Pedestal
- 3" colour-coded lever handles
- 1/2" single water feed
- Chrome plated
- Flow rate 6l/min @ 0.1 bar

Standard Variations:

1100D/6	Basin Tap with 6" lever handles

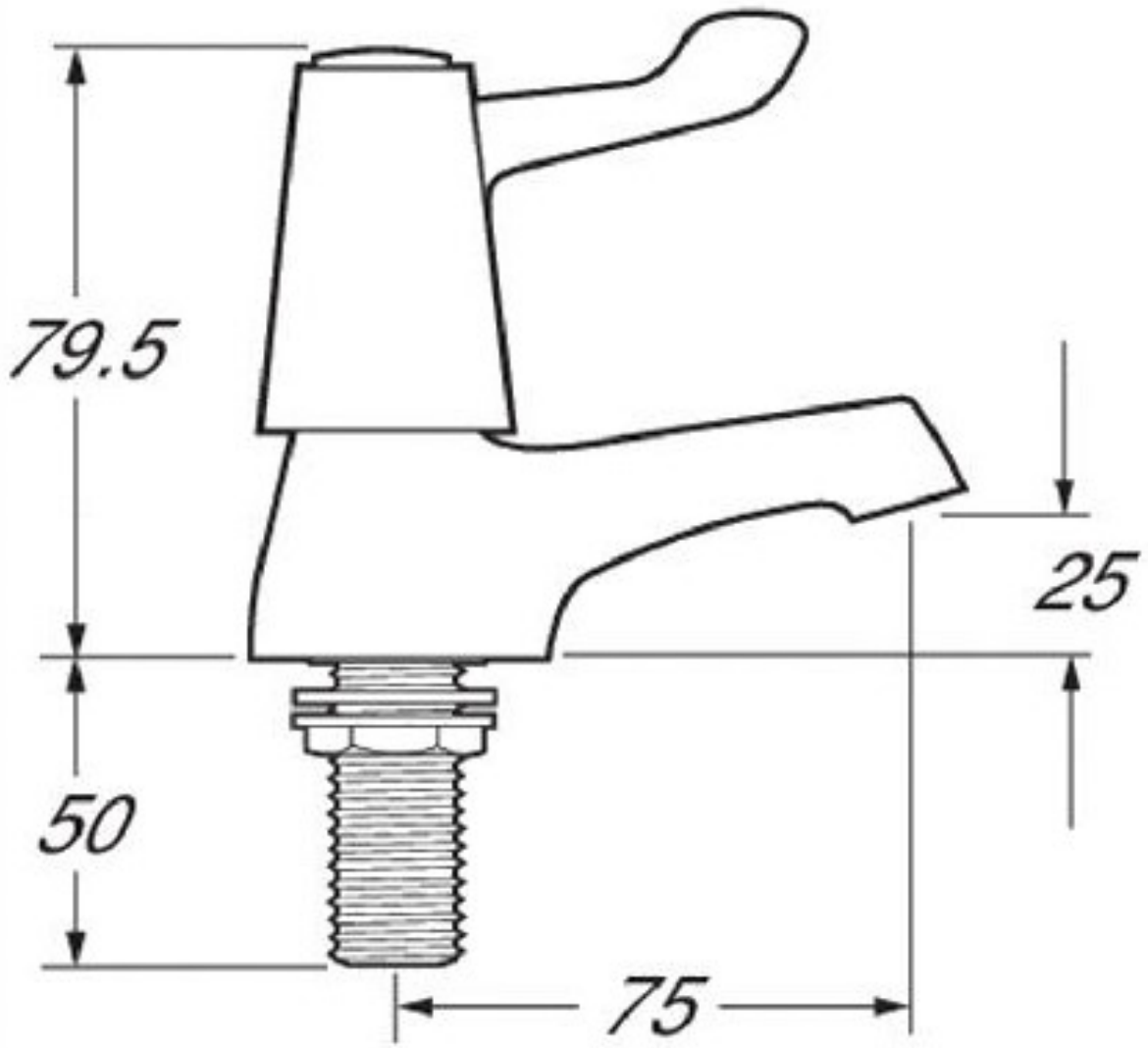

Die-Pat Divisions Ltd | The Die-Pat Centre | Broad March | Daventry | NN11 4HE

www.die-pat.co.uk
01327 311144
sales@die-pat.co.uk

Created: 01.11.2018
Last revised: 11.10.2022

In accordance with our policy of continued development we reserve the right to alter design and specifications without prior notification

Accessories

Soap Dispensers

CODE	ITEM	CONTAINER HEIGHT mm	TOTAL HEIGHT mm	CONTAINER DIA. mm
DPSD-1000	Soap Dispenser – Economy	154	262	55
DPSD-2000	Soap Dispenser – Premium	212	390	90

Blanking Plate

HBBP	Blanking plate – 45mm dia.

Basin Taps

Basin Taps with Cross heads | 1/2"

CODE	ITEM
1000/D	1/2" Chrome plated basin taps w/ cross heads – WRAS approved

Basin Taps with Tricon heads | 1/2"

CODE	ITEM
4100/D	1/2" Chrome plated basin taps w/ tricon heads – WRAS approved

Basin Taps with Levers | 1/2"

CODE	ITEM
1100/D	1/2" Chrome plated basin taps w/ 3" levers – WRAS approved
1100/6/D	1/2" Chrome plated basin taps w/ 6" levers – WRAS approved

Self Closing Basin Taps | 1/2"

CODE	ITEM
CORM03/D	1/2" Chrome plated, self closing basin taps – WRAS approved

MT BOILER

MT4 1000762	MT8 1000763	MT8F 1000763F	DIMENSIONS

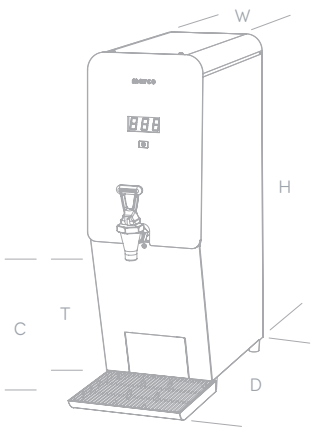

SEE TABLE FOR PRODUCT DIMENSIONS

- Insulated tank for minimal energy-loss
- 4 or 8L options
- In-built filter option
- 28 litre output per hour
- Removeable drip tray

ENERGY-EFFICIENT & RELIABLE COUNTERTOP WATER BOILERS WITH SLEEK LED TEMPERATURE DISPLAY.

BOILERS

NAME ORDER CODE	DIMENSIONS (D x W x H mm)	TAP TO DRIP TRAY (T mm)	TAP TO COUNTER (C mm)	IMMEDIATE DRAW OFF	L/HR	CUPS/HR	POWER @220V	PLUMBING REQS
MT4 1000762	436 x 202 x 464	238	259	4L	28L	156	2.8kW	3/4" BSP
MT8 1000763	436 x 202 x 589			8L				
MT8F 1000763F								

PACKAGING

NAME ORDER CODE	PACKED WEIGHT	PACKAGING DIMENSIONS (L x W x H mm)	QTY / PALLET
MT8 1000763	9.5kg	510 x 260 x 655	24
MT8F 1000763F	10kg		

ASSOCIATED PRODUCT (SOLD SEPARATELY)

OPTIONAL

HANDS-FREE URN TAP ADAPTER
2100500

MT BOILER

MT BOILER

MT4 1000762

MT8 1000763
MT8F 1000763F

VENTILATION REQUIREMENTS

50mm/1.9" clearance required at each side and back of machine if installed in an enclosed cabinet.

ELECTRICAL INSTALLATION PROCEDURE

Electrical specification: 2.8kW 200-230Vac 50Hz .
When installing the machine, always observe the local regulations and standards. The appliance is supplied with a moulded power cord. A suitable mains power supply socket should be available within easy access of the appliance so that it can be disconnected easily after install.

PLUMBING INSTALLATION PROCEDURE

- Ensure that the equipment is installed according to local plumbing & water regulations.
- Mains water pressure required (limits): 100-500kPa, 0.1-0.5MPa (14.5-72.5psi).
- Fit a stop valve on a cold water line and attach a 3/4" BSP male fitting, (e.g. 3/4" x 1/2" or washing machine type stop valve).
- Turn on the water to flush any impurities, dust etc from the inlet hose and water pipe. Allow several litres through. Especially for new installations.
- Connect the hose to the inlet valve of the boiler. Make sure a sealing washer is fitted.
- Turn on water and check for leaks.

NOTE:

- Using a non-food grade hose (e.g. a washing machine hose) will usually result in off tastes & smells in the water and can possibly be toxic.
- Do not connect the machine to pure reverse osmosis water or other aggressive types of water.

OPERATING BOILER FOR THE FIRST TIME

- Check that all installation procedures have been carried out.
- Ensure water valve is connected
- Plug in the IEC connector to the boiler.
- On models with a filter, connect the filter.
- Plug boiler into suitable socket.
- The boiler will power up.
- The screen will show the software revision.
- The machine will then fill with water and the display will flash between E-2 & the current temperature of the tank, until the water has reached the low level probe, then it will show the current water temperature.
- The default temperature is 95°C.
- Once the machine is up to temperature the boiler is now ready for use.

NOTE:

- Because the boiler is electronically controlled no priming is necessary.
- The element cannot switch on until a safe level of water is reached.

Under Counter Refrigeration

UCR140

UCF140

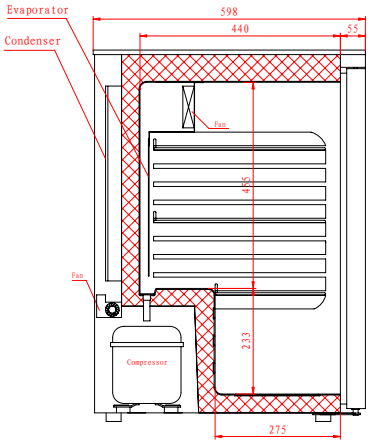

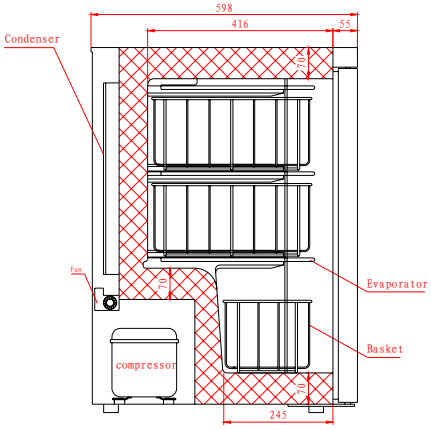

FEATURES
High grade 304 stainless steel exterior
ABS interior
Height adjustable from 819 – 850mm
Reversible door
Lock fitted as standard
UCR140 - adjustable shelves UCF140 - fixed shelves with baskets
Replaceable door gasket

TECHNICAL SPECIFICATIONS		
	UCR140	**UCF140**
Controller:	Digital controller with temperature display	
Cooling:	Fan assisted	Static
Defrost:	Automatic	Manual
Refrigerant:	R600a	R600a
Climate Class:	4	4
Temperature Range:	+2°C ~ +8°C	-16°C ~ -24°C
Power Supply:	13amp	13amp

MODEL	GROSS CAPACITY	EXT. DIMENSIONS (H x W x D mm)	ENERGY RATING	POWER CONSUMPTION	KWH /ANNUM	DECIBELS	WEIGHT (kg)	**RRP**
UCR140	145L	819 x 598 x 598	A	135W	390	53dBA	38	
UCF140	115L	819 x 598 x 598	-	135W	-	53dBA	41	
M4-UCRSTACK	-	-	-	-	-	-	-	

Blizzard™

FRIIA COLD HANDS-FREE

HANDS-FREE FONT 1000857	CHILLER 1000860	SYSTEM SET-UP

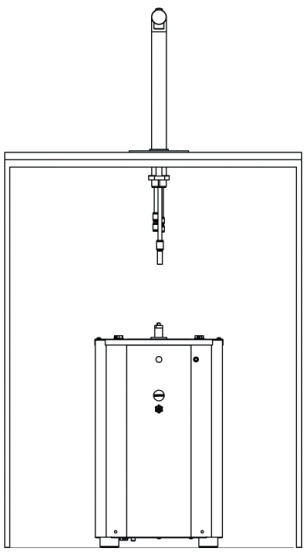

- Cold only
- Safe and hygienic: eliminates touchpoint

TOUCH-FREE FONT

SIZE			PACKAGING	
DIMENSIONS INC. DRIP TRAY (D X W X H mm)	DIMENSIONS EXCL. DRIP TRAY (D X W X H mm)	TAP TO COUNTER (mm)	PACKAGING DIMENSIONS (L x W x H mm)	WEIGHT
168 x 120 x 345	128 x 30 x 345	305	290 x 570 x 215	1.65kg

CHILLER

SIZE	PERFORMANCE SPECS		PLUMBING, ELETRICAL AND TECHNICAL SPECS					PACKAGING	
DIMENSIONS (D X W X H mm)	L/HR	CUPS /HR	POWER @220v	PLUMBING REQS	COMPRESSOR POWER	CHARGE	REFRIGERANT	PACKAGING DIMENSIONS (L x W x H mm)	WEIGHT
436 x 259 x 455	30-40l/hr based on incoming water temp of 15°C and output water temp of 5-7°	175-235 (ΔT = 10 °C)	180 W	3/4" BSP	1/8hp	45g	R290	500 x 320 x 520	31kg

FRIIA COLD HANDS-FREE

FONT DIMS

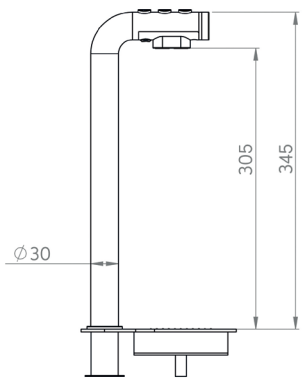

COUNTER CUT-OUTS

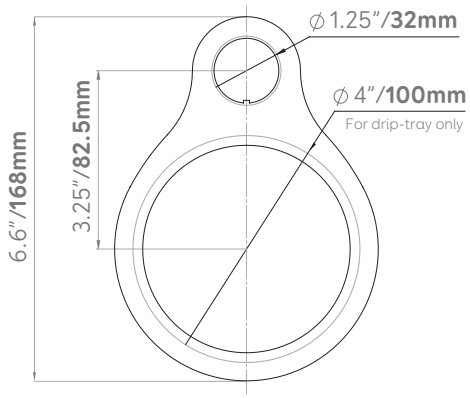

RADIUS OF MAXIMUM FONT PLACEMENT

Standard 800mm high cabinet

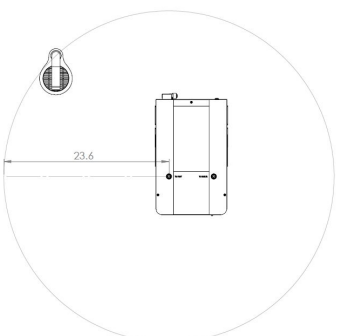

OPERATING ENVIRONMENT

Cannot exceed temperature of 35°C

CABINET

Min: 800mm (h) x 600mm (w) x 600mm (d) with 100mm clearance around machines all sides

PLEASE NOTE It is essential to allow for two ventilation points when installing FRIIA. Vents are not supplied.

FAN INSTALLATION & VENTILATION

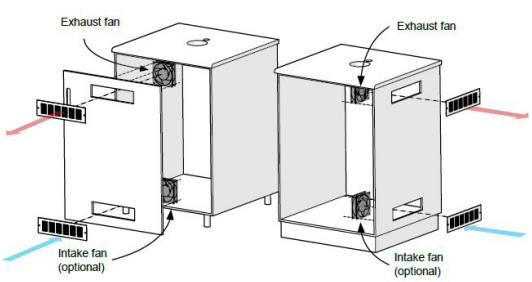

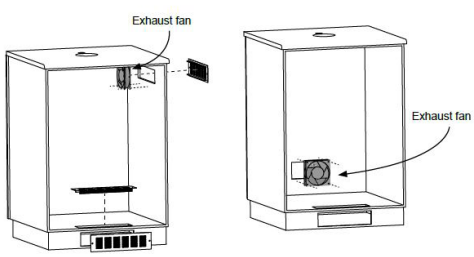

For more information visit **www.marcobeveragesystems.com**

Water Filter Systems

Marco is proud to partner with one of Europe's leading suppliers of water filtration systems.

Bestmax by water+more specialise in top technological solutions to optimise water products in the catering sector.

The technology used in the Bestmax range removes surplus and destructive limescale from tap water and transforms it into optimal water for coffee or tea.

1. Determine the Carbonate Hardness	2. By-pass Setting	3. Filter Capacity In Litres			
Carbonate Hardness in °KH*	Setting	S	M	L	XL
8	3	1025	3656	5150	7500
10	3	820	2925	4120	6000
12	2	620	2212	3115	4537
15	2	496	1769	2492	3630

Features

4-step filtration for constant water quality
Including filtration of the bypass water
Can be used horizontally and vertically
Flexible – one connecting filter head for all product sizes
Quick and easy filter change
Low-cost operation
Service-friendly due to short rinsing times

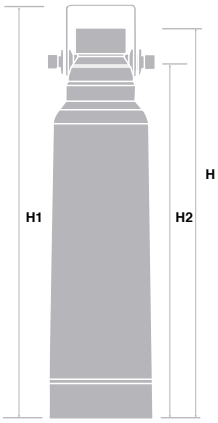

bestmax
best water technology

Bestmax

The partner of choice to maintain correct water quality for excellence in brewing.

Filters	Order Code	System	Replacement Cartridge	Packing (mm) Dimensions	(H1mm)	(H2mm)
Filter Besttaste S1 Kit	8000710	Carbon/Membrane	8000711	345	370	340
Filter Bestmax S Kit	8000720	Carbon/Resin	8000721	345	370	340
Filter Bestmax M Kit	8000730	Carbon/Resin	8000731	465	490	460
Filter Bestmax L Kit	8000740	Carbon/Resin	8000741	505	530	500
Filter Bestmax XL Kit	8000750	Carbon/Resin	8000751	505	530	500
Water testing kit	8000550					