A1

© 2005. Hilton Building Services Ltd.
DO NOT SCALE

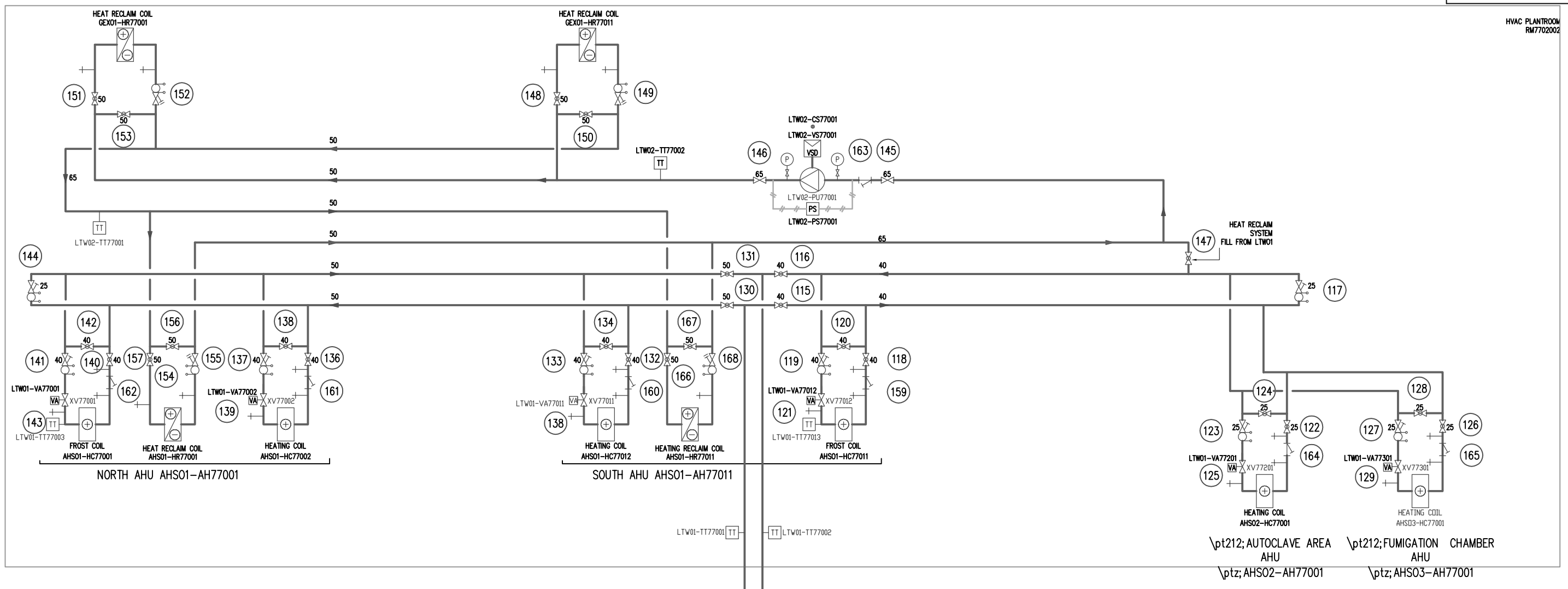

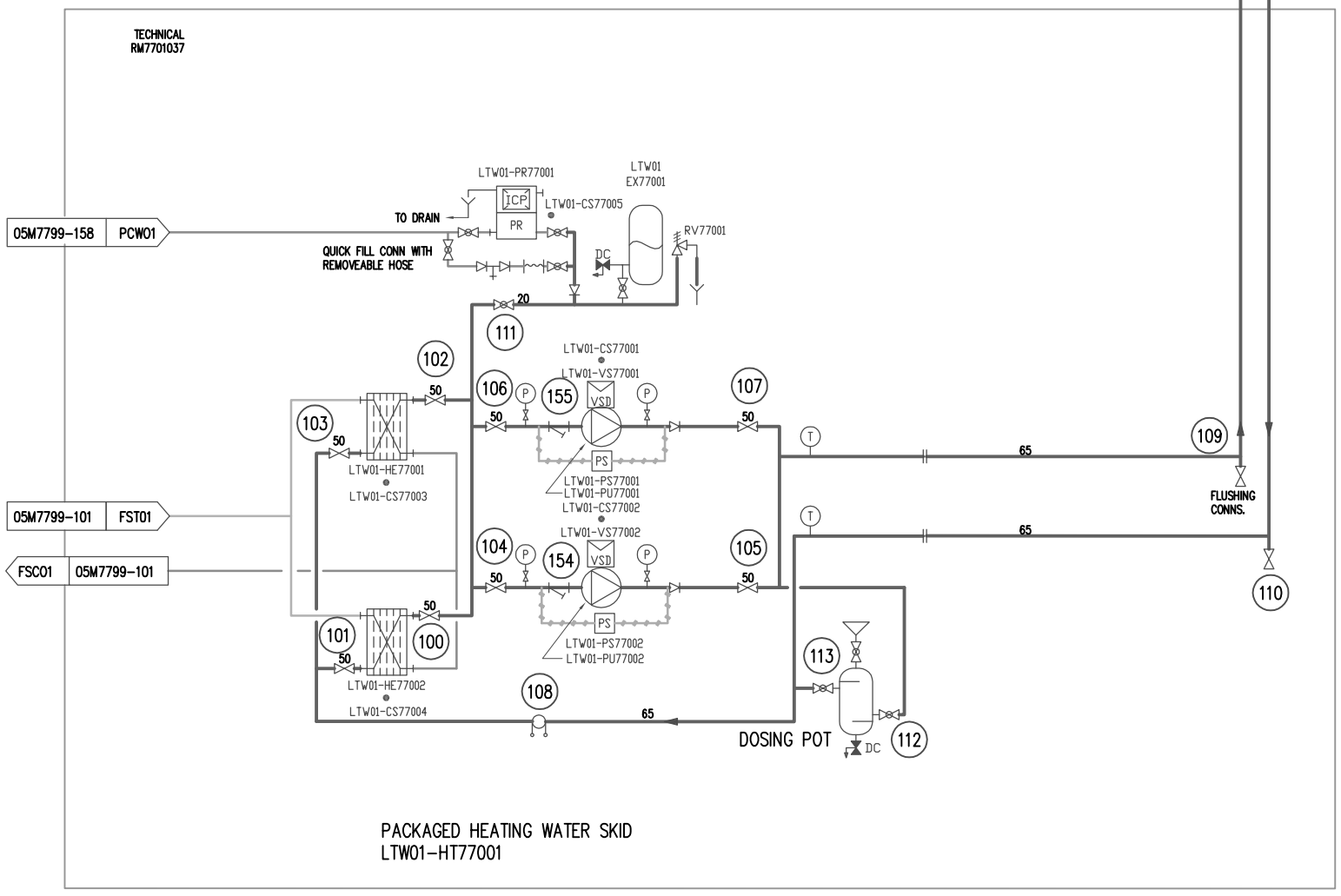

PACKAGED HEATING WATER SKID
LTW01-HT77001

REV	DATE	BY	DESCRIPTION	CHKD

hiltons
building services engineers

Hilton Building Services Limited
Waterway Street
Nottingham
NG2 3AD
Tel: +44 (0) 115 9861221 • Fax: +44 (0) 115 9866870 • Email: sales@hiltons.co.uk

AS INSTALLED

PROJECT:
SAP04 LABORATORY BUILDING
PIRBRIGHT

DRAWING TITLE:
BUILDING 77
LTW01/02
HEATING & HEAT RECOVERY
WATER SYSTEM SCHEMATIC

SCALE & PAPER SIZE:	DATE:
NTS A1	10/3/2010
DRAWN BY: AH	CHECKED BY: D.O'N

Drawing No: 109186-05M7799-111
Revision Status: AI
Web Drawing No: N/A