DO NOT SCALE FROM THIS DRAWING EXCEPT FOR PLANNING PURPOSES. THE CONTRACTOR IS TO CHECK ALL DIMENSIONS AND LEVELS ON SITE BEFORE COMMENCING WORK AND NOTIFY THE ARCHITECT OF ANY DISCREPANCIES.

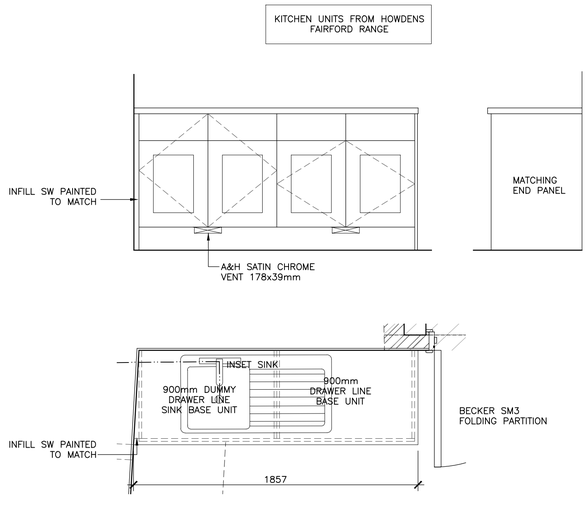

B 05 14 GF KITCHENETTE UNIT
SCALE: 1:20 M

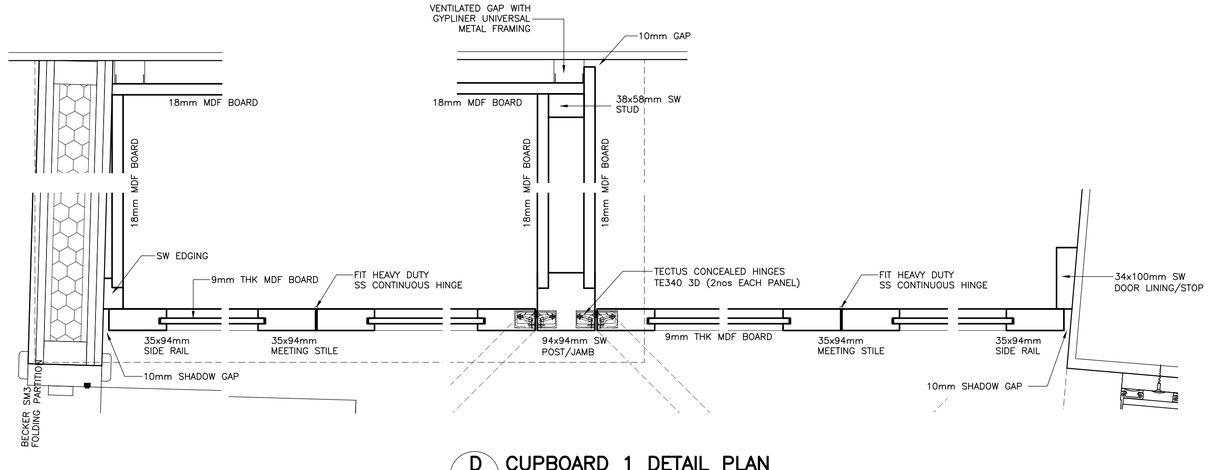

D 05 14 CUPBOARD 1 DETAIL PLAN
SCALE: 1:5 M

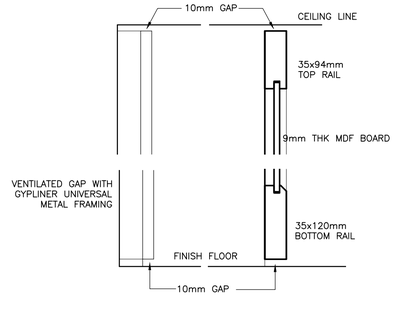

E 05 14 CUPBOARD 1 DETAIL SECTION
SCALE: 1:5 M

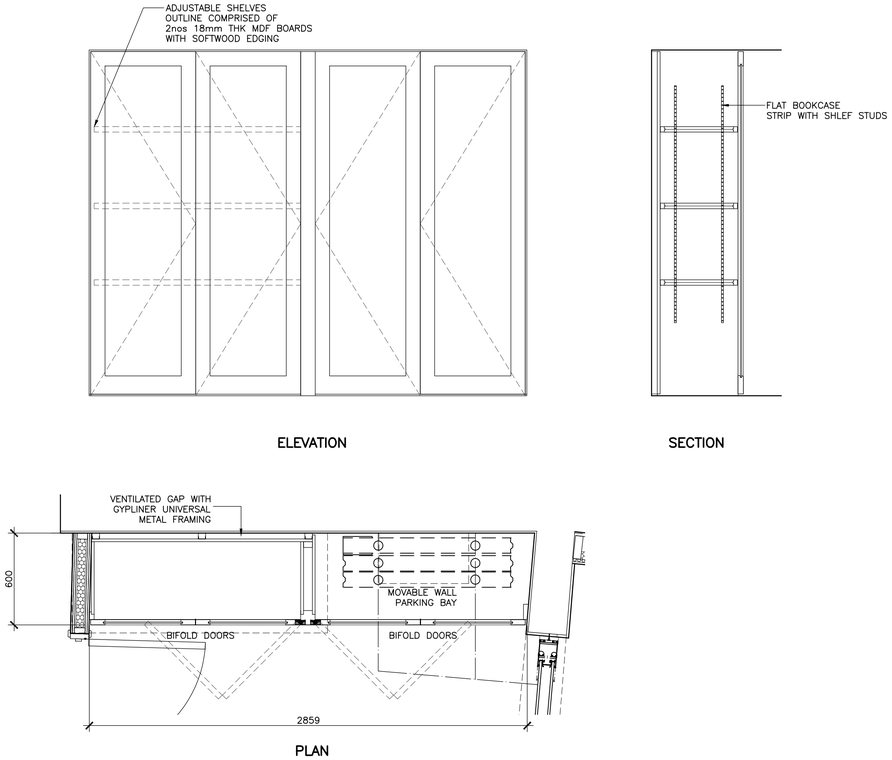

A 05 14 CUPBOARD 1
SCALE: 1:20 M

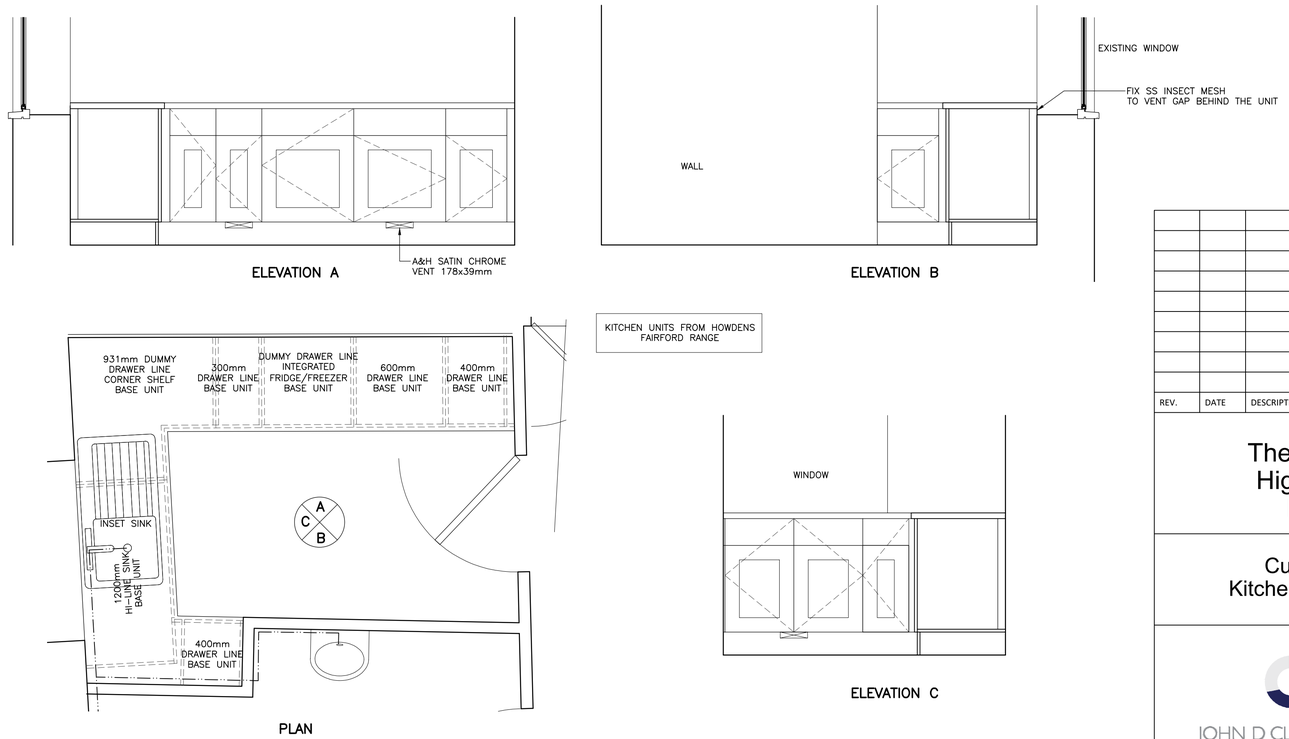

C 06 14 FIRST FLOOR KITCHEN
SCALE: 1:20 M

REV.	DATE	DESCRIPTION

PROJECT

The Almonry
High Street
Battle

TITLE

Cupboard 1
Kitchen units Detail

JOHN D CLARKE ARCHITECTS

2 West Terrace, Eastbourne, BN21 4QX · Telephone: 01323 411506
admin@jdcarchitects.co.uk www.jdcarchitects.co.uk

SCALE	DRAWING No.	DRAWN BY
as shown	10205/14	apr
DATE 08.11.19	REVISION	Original Paper Size A1