WF 4

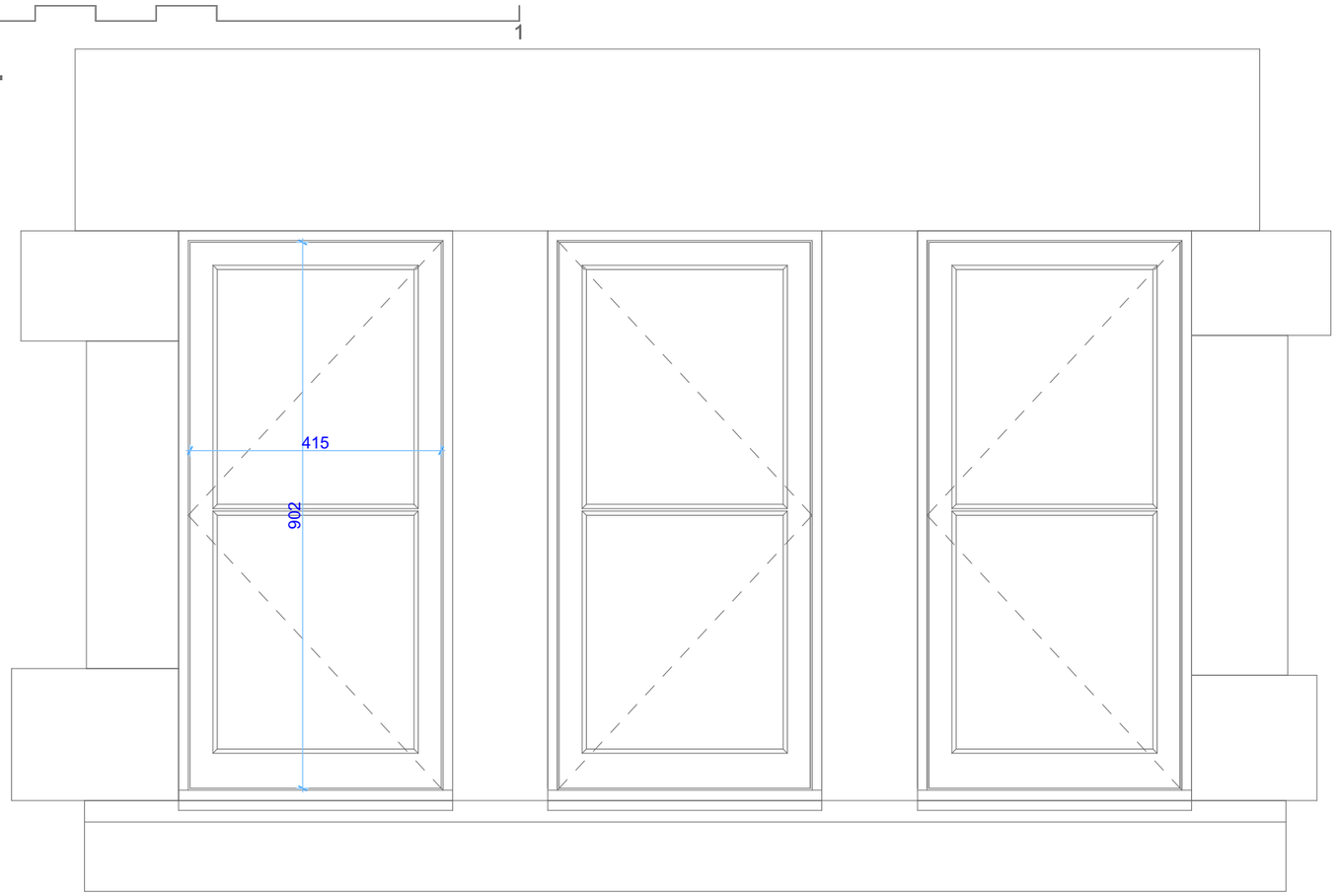

Notes on WF4:
WF4 is an existing tripartite window with timber lights all three of which are opening. The timber casements are different to those on the south elevation as they are more modern with 1/1 glazing. The frames are similarly very slight and appear to be screwed into the masonry. The precise configuration of the stonework detailing behind is units is unclear but the mullions seem to be very simple rectalinear profiles. T

Removing the opening lights will require cutting a number of fixings.

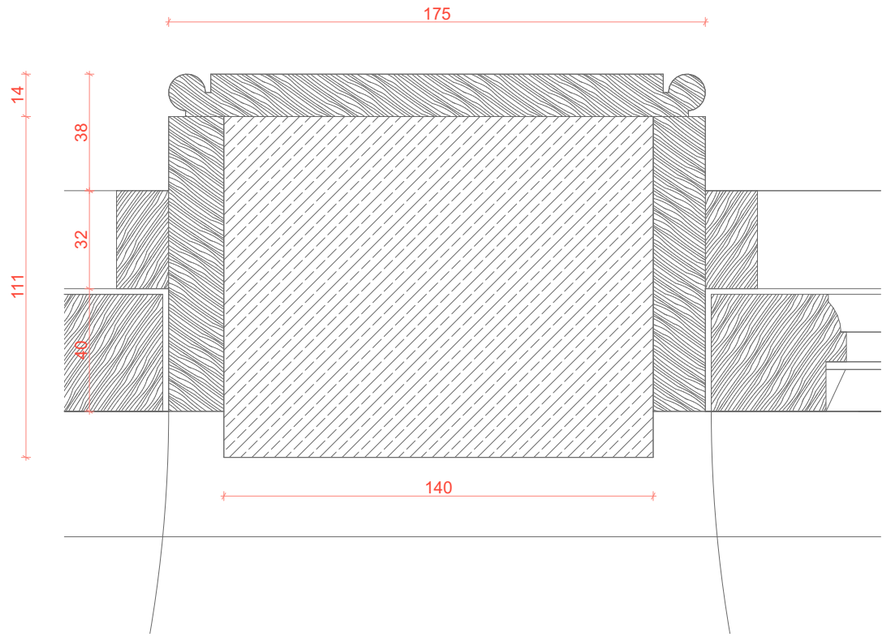

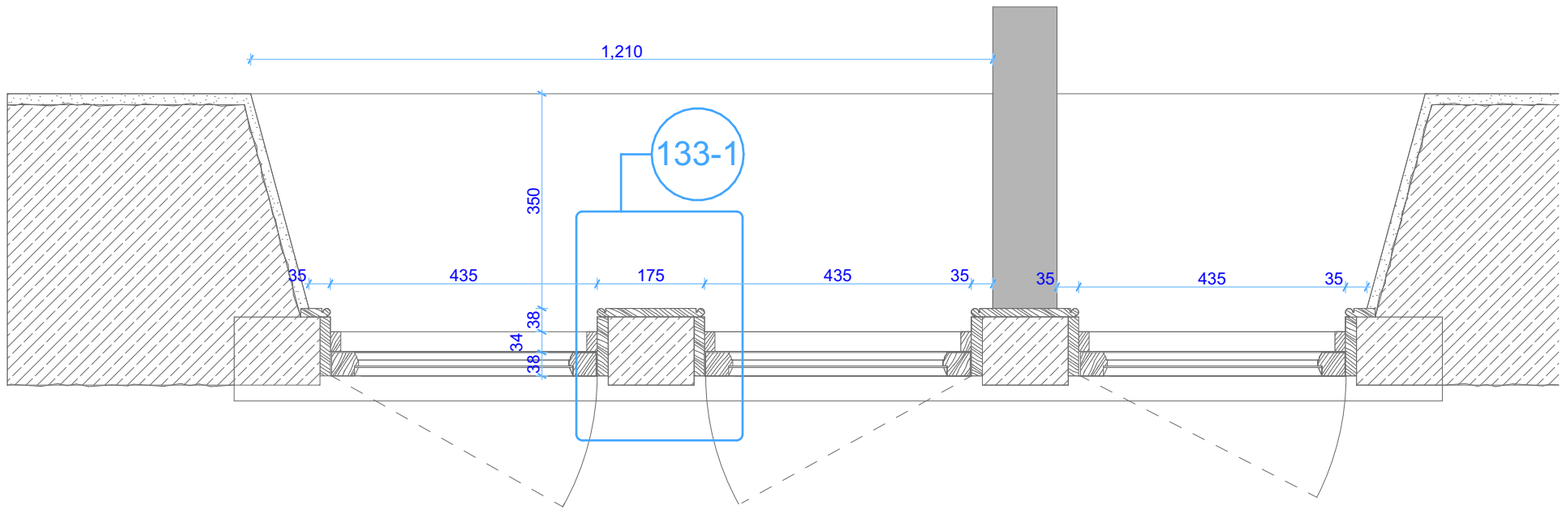

HBA
HARRISON BROOKES ARCHITECTS 01373 303453

Rev	Details	Issue Date

PROJECT:	HOP POLE INN LIMPLEY STOKE	BA2 7FS	HBA 345
DRAWING:	WINDOW WF4 EXISTING	SCALE: 1:10, 1:2	133 P1
		SIZE: A3	
	PHASE 1 WORKS (TENDER)	DATE: 13/03/2023	PHASE 1