WG 2

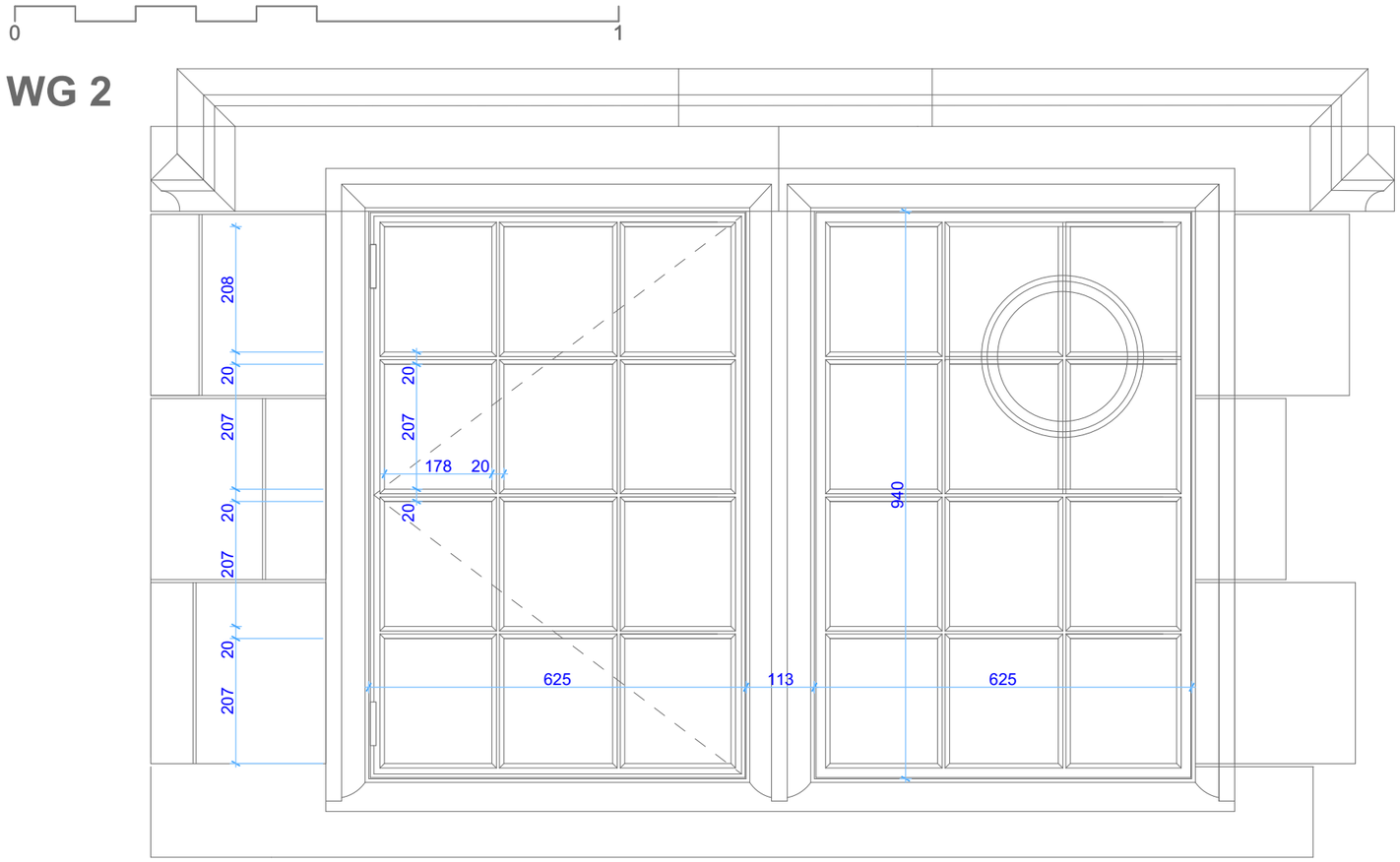

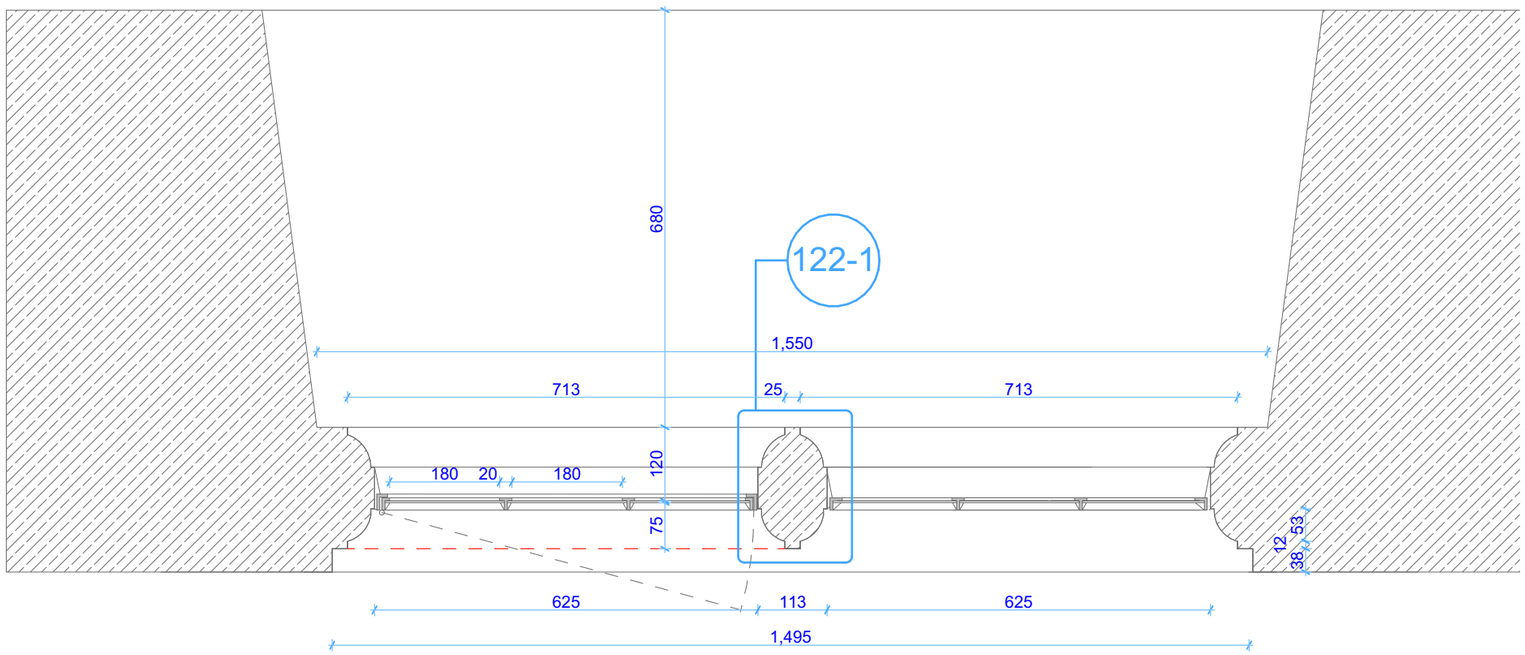

Notes on WG2:
WG2 is an existing BIpartite window with metal lights one of which is fixed with an inserted fan and one being opening. Access to assess the metalwork is awkward due to a fenceline, but there are signs of corrosion and some swelling. The lefthand opening light is painted shut and the righthand light has been modified to introduce the fan. The glass is intact but the putty is begining to debond.

The lights appear to be made from 20mm x 6mm flat steel with T section glazing bars an L section angles to the perimeter. Whilst it can not be proved we assume that the L sections are screw or pin fixed into the stonework and then cemented into place.

Any work on these lights will require them to be cut out using blades inserted between the stone and the frame.

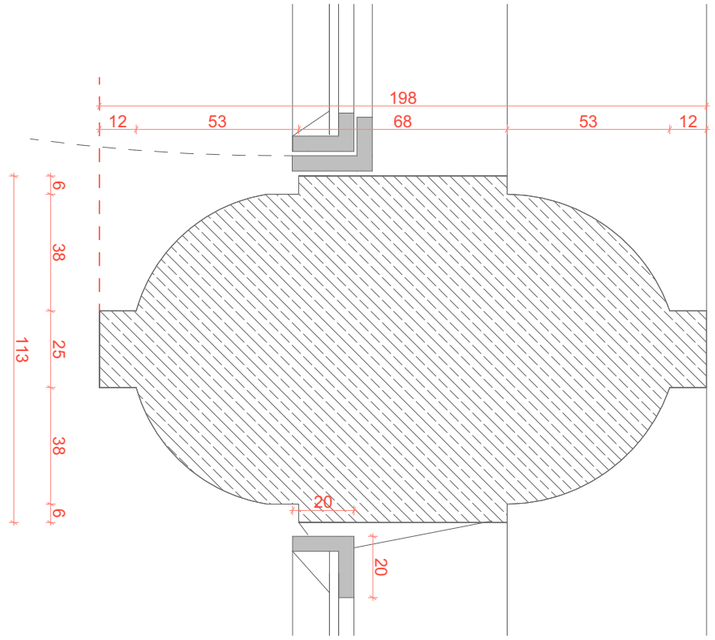

HBA
HARRISON BROOKES ARCHITECTS 01373 303453

Rev	Details	Issue Date

PROJECT:	HOP POLE INN LIMPLEY STOKE	BA2 7FS	HBA 345
DRAWING:	WINDOWS WG2 EXISTING	SCALE: 1:10, 1:2	122 P1
		SIZE: A3	
	PHASE 1 WORKS (TENDER)	DATE: 13/03/2023	PHASE 1