WF1

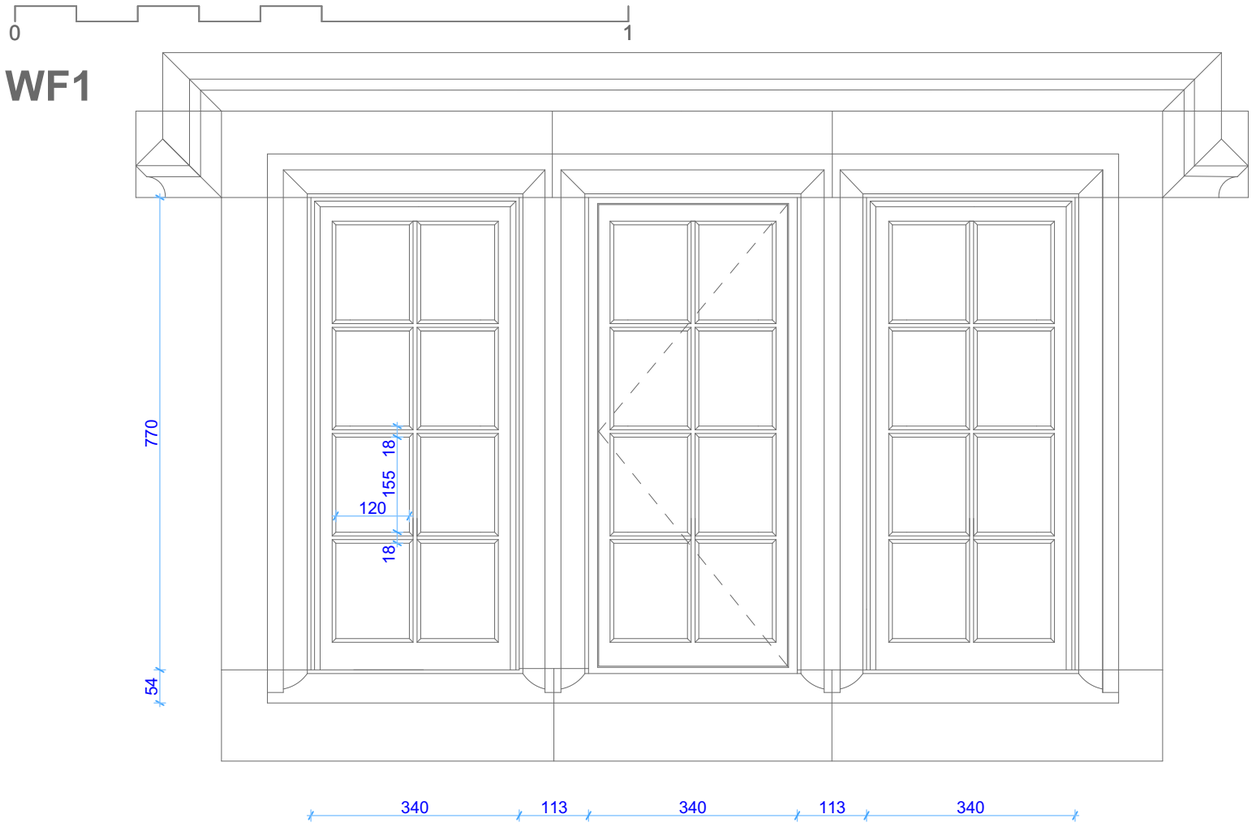

Notes on WF1:
WF1 is an existing tripartite window with timber lights two of which is fixed with and the central one is opening. The timber casements are held in place with timber fillets which essentially clamp the unit in place. The precise configuration of the stonework detailing behind is unit is unclear but the mullions seem to be traditional ovolo profiles. The opening light has a very narrow frame made out of 57 x 22mm timber and has been set forward of the fixed lights.

Removing both the fixed and opening lights will require the removal of the timber fillets and cutting a number of fixings. One pane of the glass is currently broken.

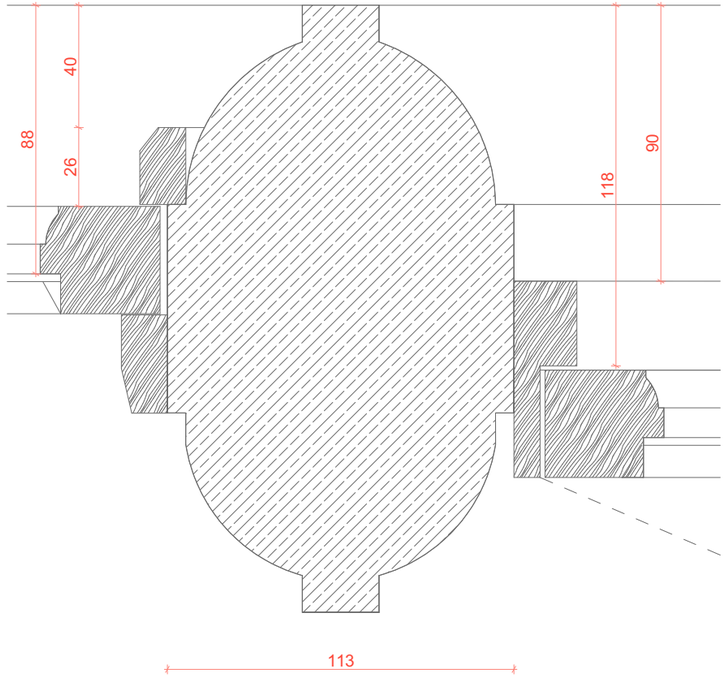

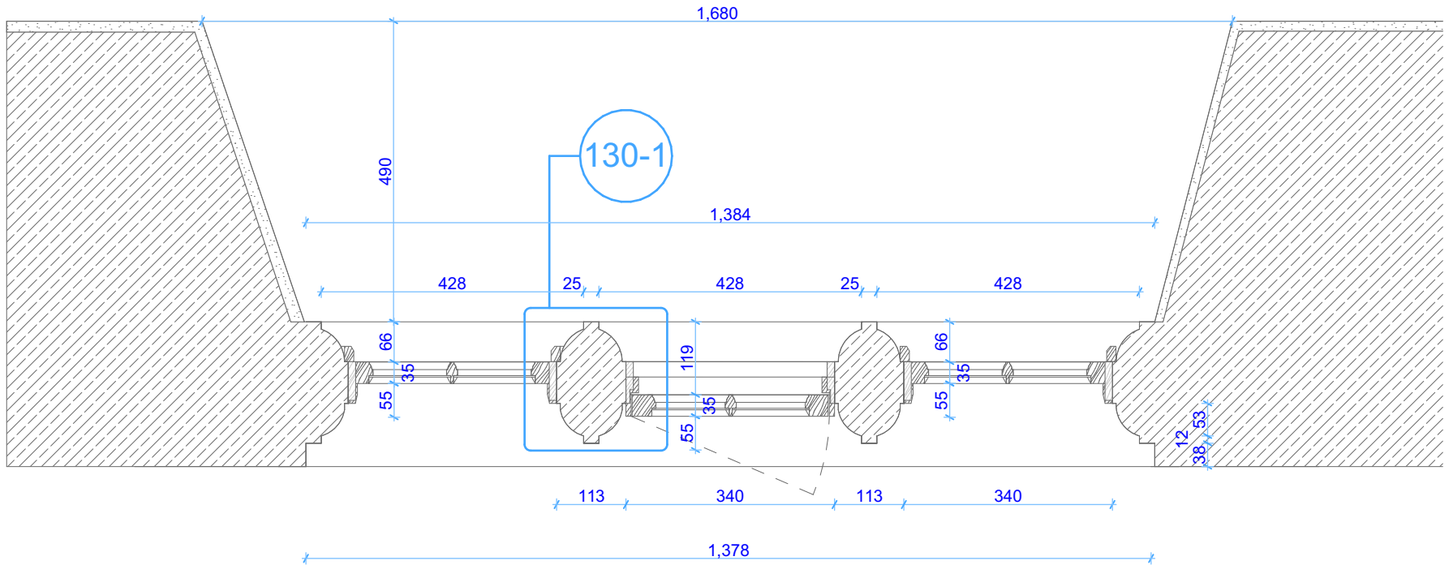

HBA
HARRISON BROOKES ARCHITECTS 01373 303453

Rev	Details	Issue Date

PROJECT:	HOP POLE INN LIMPLEY STOKE	BA2 7FS	HBA 345
DRAWING:	WINDOWS WF1 EXISTING	SCALE: 1:10, 1:2	130 P1
	PHASE 1 WORKS (TENDER)	SIZE: A3	PHASE 1
		DATE: 13/03/2023	