A1 | SI-5711-016 | A

DO NOT SCALE

ITEM No	TITLE / DESCRIPTION	QTY	REMARKS
1	ASME B16.5 3/4" 150LB RFWN SS316 FLANGE	1	RAISED FACE FINISH <0.8 µm RA
2	ASME B16.9M 10S 3/4" LR SS316 1.5D ELBOW	1	1.5 D RADIUS
3	ASME B36.19M 6" 40S PIPE, 0.48 M LG	1	----
4	ASME B16.5 6" 150LB RFWN SS316 FLANGE	1	RAISED FACE FINISH <0.8 µm RA
5	ASME B16.5 6" 150 LB RF BLIND SS316 FLANGE	1	RAISED FACE FINISH <0.8 µm RA
6	M20 X 70 LG BZP MS MACHINE BOLT	8	----
7	M20 BZP MS HEX NUT C/W WASHER	8	----
8	8 MM THK LASER CUT SS316 END PLATE	1	----
9	ASME 36.19M 1" & 3/4" INLET/OUTLET PIPING	1	----
10	ASME B16.9 10S 2" LR SS316 1.5D ELBOW	2	1.5D RADIUS
11	ASME B36.19M 1" 10S PIPE, <0.2 M LG	2	----
12	ASME B16.5 1" 150LB RFWN SS316 FLANGE	2	RAISED FACE FINISH <0.8 µm RA
13	ASME B36.19M 3/4" 10S PIPE, <0.20 M LG	1	----

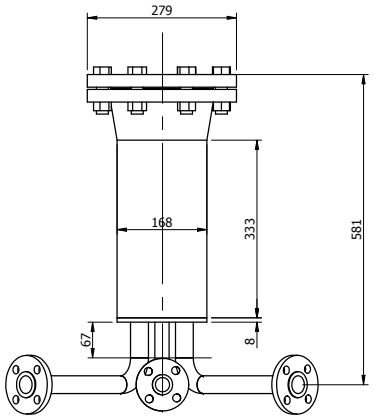

ELEVATION VIEW

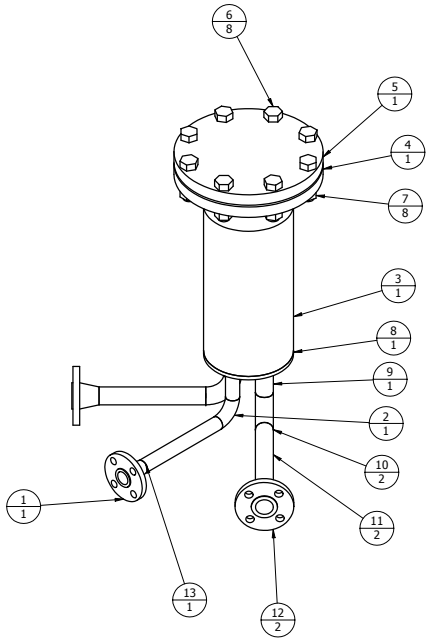

UNDERSIDE VIEW

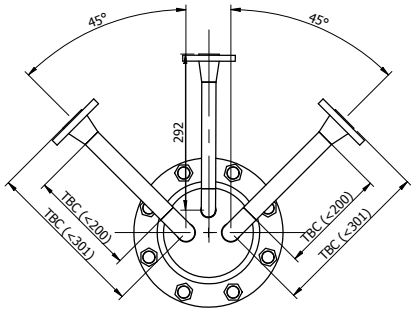

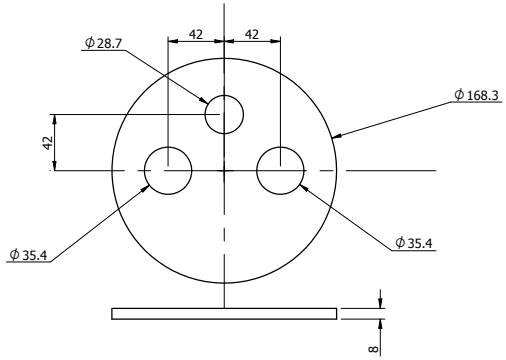

PLAN VIEW

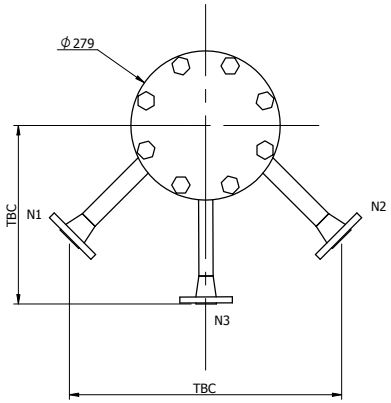

NOTES

1. THE INTERNAL ARRANGEMENT OF CARTRIDGES, INLET, OUTLET AND VENT PIPING IS TO BE DETERMINED BY THE SUPPLIER TO SUIT THE FOLLOWING:

MAX FLOW RATE:	42		L MIN^{-1}
CAPACITY:	9		L
EFFICIENCY:	98%	at	100 µm
MAX dP:	500		mbar
SURFACE AREA:	0.25		m^2

2. DETAILED DESIGN BY SUPPLIER TO CONFORM TO PD5500:
   DESIGN PRESSURE: 14 BAR G
   DESIGN TEMPERATURE: 60°C

3. DRAWING SCALE: 1:5

4. EXACT LENGTHS OF ITEMS 11 & 13 TO BE CONFIRMED.
   PLEASE QUOTE TO THE MAXIMUM DIMENSIONS SHOWN.

ISSUE	DATE	MOD. No.	DRAWN BY	CHKD BY	APPD BY	MANUFACTURE ONLY WHEN STATUS IS ISSUED	STATUS
A	30.07.2018	?	JPH				ISSUED

TOLERANCES UNLESS STATED: X ± 0.5, X.X ± 0.3, X.XX ± 0.1, ANGLE ± 0.2°

MATERIAL & SPEC.: SEE ITEMS LIST

SURFACE TEXTURE UNLESS STATED: Ra N/A

FINISH: CLEAN, REMOVE ALL BURRS

PROJECTION: DIMENSIONS IN mm UNLESS STATED; DRAWING CONFORMS TO BS 8888 TOLERANCING ISO 8015

© STFC 2018

ISIS DESIGN DIVISION
RUTHERFORD APPLETON LABORATORY
HARWELL CAMPUS, DIDCOT, OXFORDSHIRE, OX11 0QX

USED ON: ---- ---- ---- ---- ---- ----

TITLE: **TS1 F201 & F301**

---- ?

A1 | SHEET 1 OF 1 | SI-5711-016 | A

A1 | SI-5711-016 | A

PRINTED ON 02.08.2018 AT 15:26

ISIS DRAWING TEMPLATE VERSION: 9