Guidance For Pricing

Cundall have used their reasonable endeavours to establish the requirements of the Client during the design stages. In this regard, the Contractor should refer to the guidance provided by BSRIA BG 6 - 'A Design Framework for Building Services' (2014 Edition) section 2.11 - Precision In Design.

This states that the design stages represent an iterative process whereby the level of detail and the degree of precision included in the design increases from one stage to the next. Following the guidelines given in Turner and Simister's Handbook of Project Management, which relate specifically to precision of cost estimates, and applying similar guidelines to the accuracy of all design, the following levels of accuracy could reasonably be achieved by the end of the respective design stages:

- **RIBA Stage 2: ± 25%**
- **RIBA Stage 3: ± 15% (± 20% at the completion of RIBA Stage 3a)**
- **RIBA Stage 4: ± 5%**

The Contractor should take into account the level of uncertainty indicated in the guidelines at the designated design stage of the project, and the Contractor should reflect the associated risk and uncertainty in their pricing.

The above precision figures do not include the effects of fundamental variations to the scale or nature of the project, however, they will reasonably be applied to quantities of materials, associated labour costs, service outlets and the final locations for equipment.

FOLLOWING INFORMATION MAY AFFECT THE DESIGN & CONTRACTOR WILL ALLOW FOR IT IN THEIR PRICING

THE FOLLOWING INFORMATION IS PRESENTLY OUTSTANDING AND MAY AFFECT THE INFORMATION SHOWN ON THIS DRAWING.

1. CONTRACTOR IS RESPONSIBLE FOR DESIGN.
2. THE CONTRACTOR SHALL NOTE THAT THEY ARE RESPONSIBLE FOR PURCHASING ALL DEVICES REQUIRED BY THE DESIGN AND AS SUCH LEAD TIME SHOULD BE TAKEN INTO ACCOUNT WITHIN THEIR PROCUREMENT PROCESS.

ELECTRIC HEATER AND SHOWER SCHEDULE

REFERENCE	PRODUCT	POWER (kW)	FLOW RATE (L/s)	MANUFACTURER
ES 1	ELECTRIC TMV3 SHOWER	10	-	TRITON SHOWERS
EW 1	ELECTRIC WATER HEATER	2.2	5	HEATRAE SADIA
EW 2	ELECTRIC WATER HEATER	2.2	15	HEATRAE SADIA

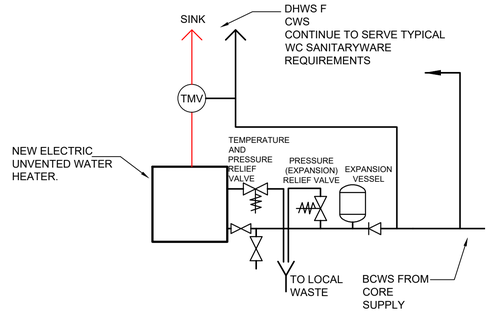

DETAIL 'A': TYPICAL WHB HOT WATER CONNECTION DETAIL

M. WHERE PIPEWORK PASSES THROUGH WALLS, PIPE SLEEVES SHALL BE PROVIDED COMPLETE WITH PLASTIC COVER PLATES & FIRE COLLARS WHERE NECESSARY.
N. THERMAL GAIN IS TO BE KEPT TO A MINIMUM BY ADEQUATE LAGGING AND SEPARATION OF COLD WATER SERVICES PIPEWORK AND COMPONENTS FROM HOT WATER SERVES AND HEATING SYSTEMS.
O. ALL PIPEWORK SHALL BE INSTALLED SO AS TO MINIMISE ANY POTENTIAL STAGNATION OCCURRING VIA "DEAD LEGS".

LEGEND:

- MAINS COLD WATER SUPPLY
- CAT-5 SUPPLY
- CAT-5 CAPPED OFF CONNECTIONS
- COLD WATER OUTLET
- HOT WATER OUTLET
- MIXED FLOW OUTLET OUTLET
- ZIP ZIP 4 IN 1 TAP
- EW ELECTRIC WATER HEATER
- IV ISOLATION VALVE

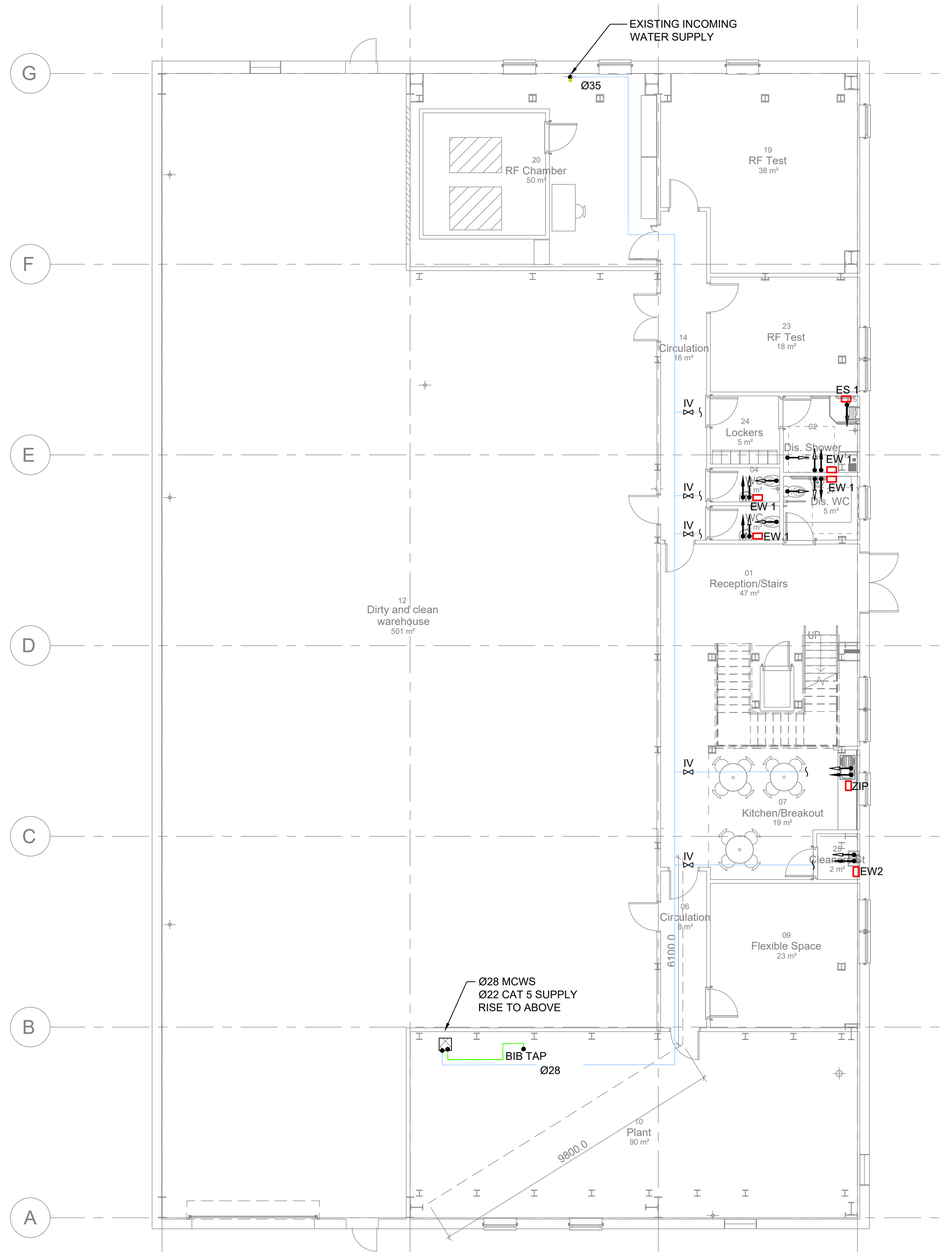

LEVEL 00

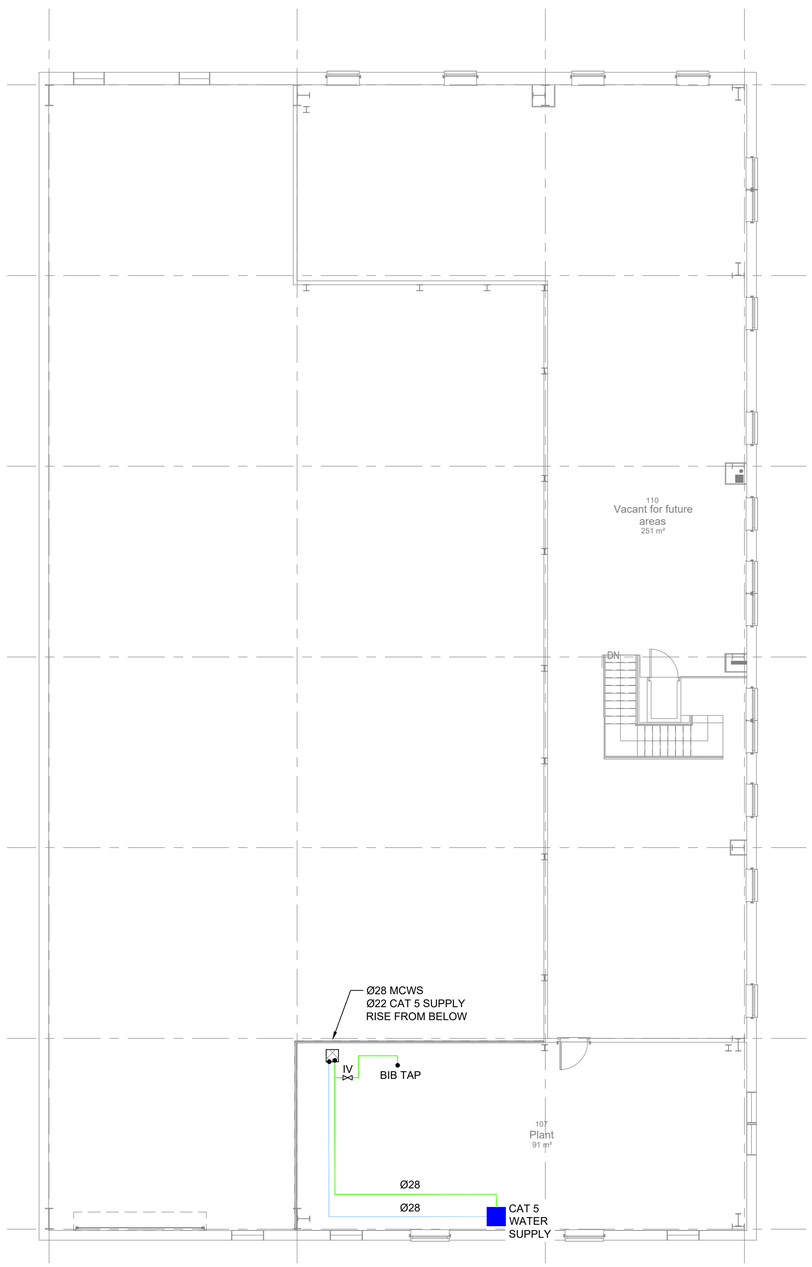

LEVEL 01 (MEZZANINE)

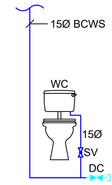

DETAIL 'B': TYPICAL WC CONNECTION DETAIL

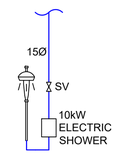

DETAIL 'C': TYPICAL ELECTRIC SHOWER CONNECTION DETAIL.

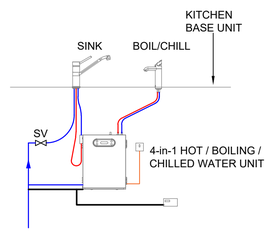

DETAIL 'D': TYPICAL 4-IN-1 UNIT CONNECTION DETAIL.

CDM RISK

WORKING ON THE FIRST FLOOR: MAINTENANCE WORK TO BE LIMITED TO DAYLIGHT HOURS.
ALL CONTRACTORS TO PROVIDE RITELITE K9 30 PORTABLE WORK LIGHT.

True scale at 1:1

1016090 A1

Based on.		
Architects Drg No.	7604-FDG-ZZ-XX-DR-A-11101-P08	Rev
Structural Drg No.		Rev
Survey Drg No.		Rev
Other Drg No.		Rev
Other Drg No.		Rev

Notes

1. THIS DRAWING SHALL BE READ IN CONJUNCTION WITH ALL RELEVANT ARCHITECTURAL, STRUCTURAL AND ENGINEERING SERVICES DRAWINGS, SPECIFICATIONS, SCHEDULES AND PROJECT SPECIFIC DOCUMENTS.
2. ALL PLANT AND EQUIPMENT IS TO BE INSTALLED TO MANUFACTURER'S RECOMMENDATIONS, ALLOWING FULL ACCESS FOR COMMISSIONING, MAINTENANCE AND REMOVAL/REPLACEMENT.
3. ALL DIMENSIONS IN mm UNLESS OTHERWISE STATED.
4. DO NOT SCALE FROM THIS DRAWING.

PARTICULAR NOTES:

A. THIS DRAWING ILLUSTRATES THE CONCEPT ENGINEERING SERVICES INSTALLATIONS. IT IS THE CONTRACTORS RESPONSIBILITY TO DEVELOP AND PRODUCE DETAILED WORKING AND CO-ORDINATED DRAWINGS.
B. THE DOMESTIC WATER SERVICES SHALL BE INSTALLED TO CONFORM WITH THE REQUIREMENTS OF BS 8558: 2011, THE WATER REGULATIONS GUIDE INCORPORATING THE WATER SUPPLY (WATER FITTINGS) REGULATIONS 1999.
C. ALL PIPEWORK, VALVES, COMPONENTS AND PLANT ARE TO BE SUITABLE FOR USE IN A WHOLESOME STANDARD WATER INSTALLATION AND CARRY THE WRAS APPROVAL.
D. WHERE UNVENTED HOT WATER SYSTEMS ARE TO BE PROVIDED, THE DISCHARGE FROM THE OPEN VENT PIPES FROM EACH OF THE CALORIFIERS SHALL DISCHARGE INTO A SEPARATE TUNDISH ARRANGEMENT VIA TYPE A AIR GAP AT A LEVEL WHICH TAKES ACCOUNT OF THE HYDROSTATIC HEAD OF THE SYSTEM AND RUN TO DRAIN.
E. PRESSURE REGULATING DEVICES SHALL BE INCORPORATED ON ALL FLOOR DISTRIBUTION MAINS, TO REGULATE THE FURTHEST FITTING TO A MAXIMUM OPERATING PRESSURE OF 2BAR.
F. EACH BRANCH CONNECTION SERVING A SANITARY FITTING IS TO BE PROVIDED WITH A QUARTER TURN SERVICING VALVE AND AUTOMATIC FLOW LIMITING CARTRIDGE.
G. THERMOSTATIC MIXING VALVES SHALL BE INSTALLED LOCAL TO EACH HOT WATER OUTLET SET AS INDICATED ON THE DRAWINGS TO ACHIEVE A CONTROLED TEMPERATURE AS TMVA RECOMMENDED CODE OF PRACTICE AND ACOP L8.
H. BRANCH CONNECTIONS TAKEN FROM THE HOT WATER CIRCULATION SYSTEM TO THE POINT OF DISCHARGE SHALL NOT EXCEED 5.0M OF WHICH 2.0M IS PERMITTED AS A BLENDED SUPPLY.
I. WARNING NOTICES SHALL BE PROVIDED AT DOMESTIC HOT WATER POINTS WHERE THE SUPPLY HAS NOT BEEN PROVIDED VIA A THERMOSTATIC MIXING VALVE.
J. ALL SECONDARY RETURN PIPELINES FROM APPLIANCES ARE TO BE PROVIDED WITH THERMOSTATIC BALANCING VALVES. TBV'S ARE TO BE COMPLETE WITH PASTEURISATION FACILITY AND TEMPERATURE DIAL.
K. THE INSTALLATION SHALL BE PROVIDED WITH DRAIN POINTS AT LOW POINTS OF THE SYSTEM TO FACILITATE DRAINING OF THE SYSTEM.
L. PIPEWORK TO BE FULLY INSULATED IN ACCORDANCE WITH THE SPECIFICATION.

Issue	Date	Description	By	Chkd	Verfd
P4	27/09/18	STAGE 3 - TENDER ADDENDUM	RP	BS	PDW
P3	15/08/18	STAGE 3 - TENDER ISSUE	FRM	BS	MW
P2	03/08/18	STAGE 3 - TENDER ISSUE	RP	BS	YK
P1	26/07/18	STAGE 3 - WORK IN PROGRESS	RP	YK	PDW

Project
SATELLITE APPLICATION DISC II

Client
SATELLITE APPLICATION CATAPULT

Architect
FAIRHURSTS DESIGN GROUP

Title
PROPOSED WATER LAYOUT

Drawing No.	Drawing Status
BSXX(53)1001	D2 - ISSUED FOR TENDER
Job No. 1016090	Scale 1:100

CUNDALL
4th Floor, Cathedral Court
15 Colmore Row
Birmingham, B3 2BH
Tel: +44 (0)121 262 2720
Website: www.cundall.com