THIS DRAWING IS THE COPYRIGHT OF ORANGE KEY LTD. IT IS PRIVATE AND CONFIDENTIAL AND IS SUPPLIED ON THE EXPRESS CONDITION THAT IT IS NOT USED FOR ANY PURPOSE OR COPIED OR COMMUNICATED TO ANY OTHER PARTY WITHOUT THE WRITTEN CONSENT OF ORANGE KEY LTD.

DO NOT SCALE

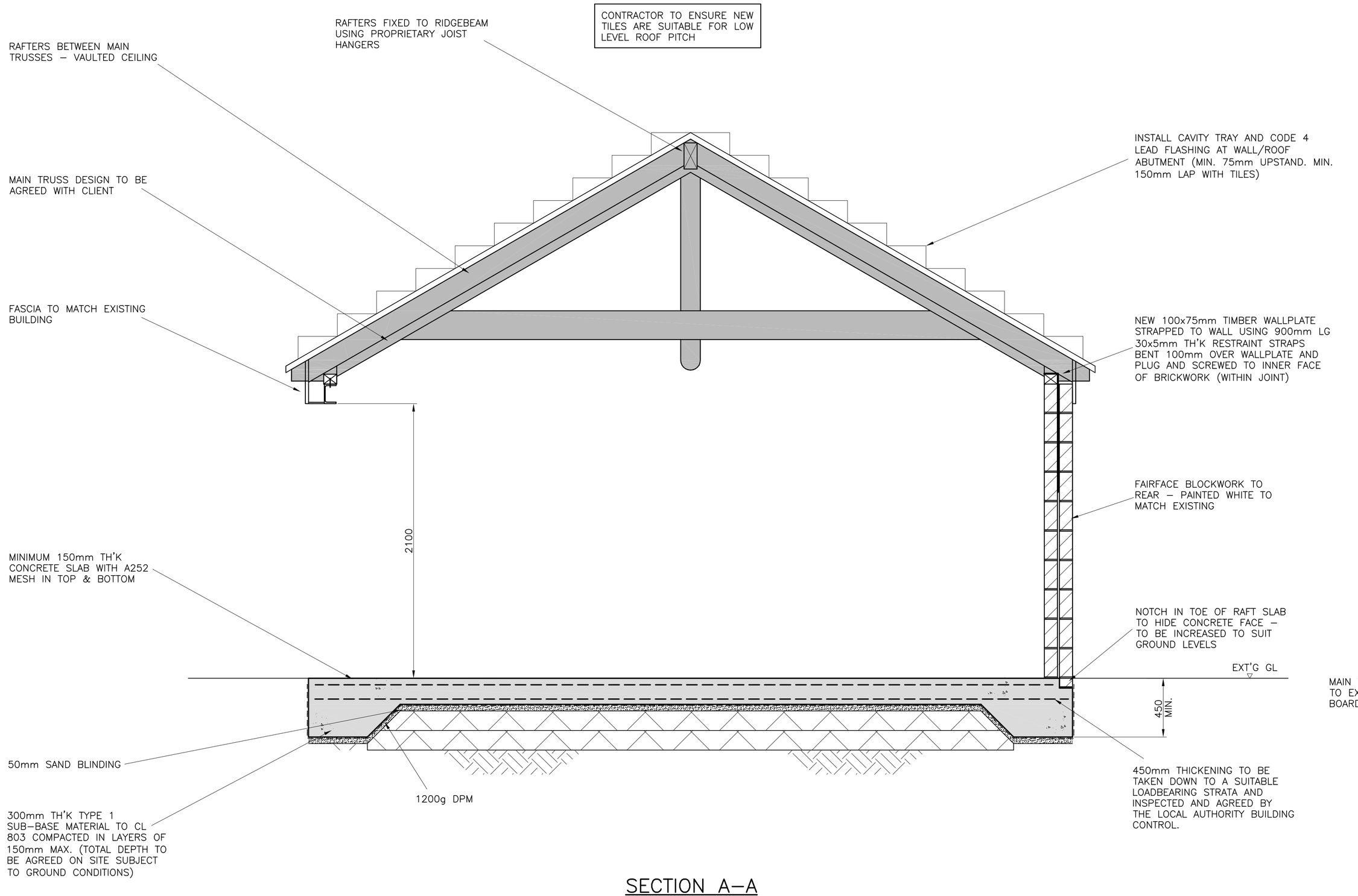

SECTION A–A
SCALE 1:20

CONSTRUCTION NOTES

IMPORTANT - It is the responsibility of the Contractor to read and understand the drawings and specification before starting work.
The design and information contained within these drawings has been checked and approved by Building Control. No alterations to the design or specification may be made by the Contractor even if directly instructed by the Client without prior written consent by Orange Key Ltd to protect both the Clients and Contractors interests.
Any alterations should be approved by Orange Key Ltd and Building Control before being implemented. Orange Key Ltd will not be held responsible for work that has not been carried out in strict accordance with these drawings unless otherwise approved in writing.

DO NOT SCALE FROM THIS DRAWING. All work to be in accordance with the latest British Standards, Codes of Practice & CE Standards. Contractor responsible for checking all dimensions prior to commencement of work.

FOUNDATIONS - Provide 450mm wide x250mm deep concrete strip foundations under new 215mm walls. Concrete mix GEN1 ready mix concrete unless otherwise stated on the foundation plan.
Minimum foundation depth to be taken down to a suitable load bearing strata and inspected and agreed by local authority building control.
Not withstanding the representations on the drawings, foundation design to comply with the building regulations act 1991.

GROUND FLOOR (raft slab) - 150mm thick concrete slab with A252 mesh in top & bottom, on 50mm sand blinding on 300mm thick type 1 sub-base material to CL 803 compacted in layers of 150mm max (thickness dependant on ground conditions). Provide 450mm thickenings to edge of slab.

D P M 's - 1200 gauge polythene, B B A approved d p m.

EXTERNAL WALLS (GF) - 215mm solid wall comprising 100mm 7N blockwork up to plate level (rear wall) and brickwork (side / front)

WALLS (BRICK/BLOCK GENERAL) - All blockwork to be in accordance with BS 5628. All joints/junction & intersections to be full bonded. Blocks/bricks used must meet the requirements of BS5628 for special category.

TIMBERS - All structural timbers to be C16 unless otherwise stated. All structural timbers forming part of the structure to be pre-treated to BS 4072 : 1999. All timber to be tanalised pressure treated to protect the timber from fungal decay & insect attack.

ROOF (Main Roof) - Slates on softwood tanalised battens (size and gauge to tile manufacturer's requirements), on Tyvek Supro breather roofing felt to BS 747 (minimum 300mm overlaps) rafters. Rafters secured with truss clip anchors to 75 x 100mm softwood tanalised wall plates, which are to be secured to inner leaf using 30x5 galvanized or stainless steel straps, 500mm from corners then at 1800mm centres.

RAINWATER GOODS - Laid to a minimum fall of 1:200 discharging into existing downpipes.

STEELWORK -
All steelwork to comply with BS 5950
All bolts to be grade 8.8
All steelwork to be grade S275 to BS EN 10025
All welds to be continuous
Internal bolts, nuts and washers etc to be zinc plated. External to be spun galvanised.
All steelwork to be galvanised to BS 729 with a min average coating thickness of 85 microns. Preparation by acid pickling or grit-blast. Site paint with 2 coats 'RIW Heviseal' after erection.
Fill beneath post/column base plates with grout or mortar as follows spaces not deeper than 25mm: neat cement slurry just fluid enough to pour. Pour & well tamped as filling proceeds.
Brackets & plates to be free:-
-from distortion due to welding and galvanising
-have truly level horizontal bearing plates
Tolerances to be in accordance with "NSSS for Building Construction"

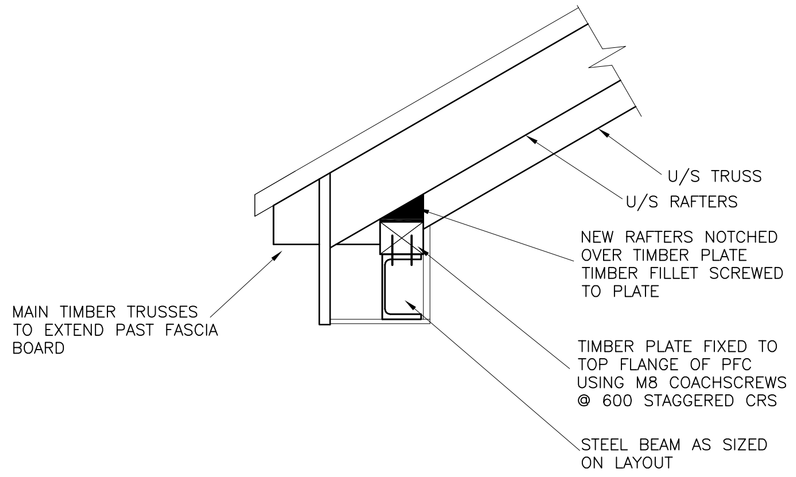

TYPICAL DETAIL THROUGH EAVES AT PFC
SCALE 1:10

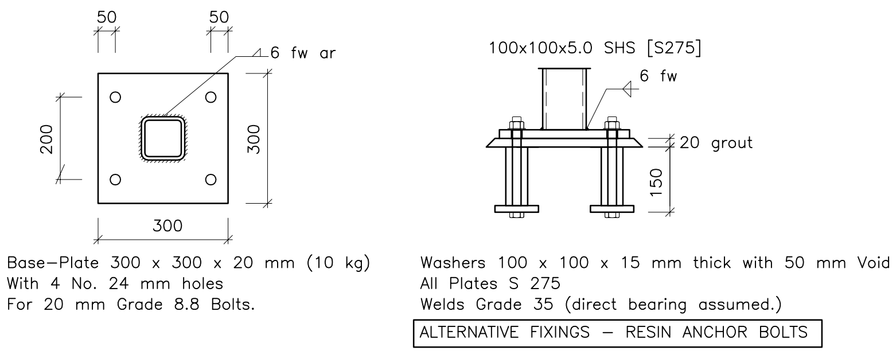

BASE PLATE CONNECTION DETAIL
SCALE 1:10

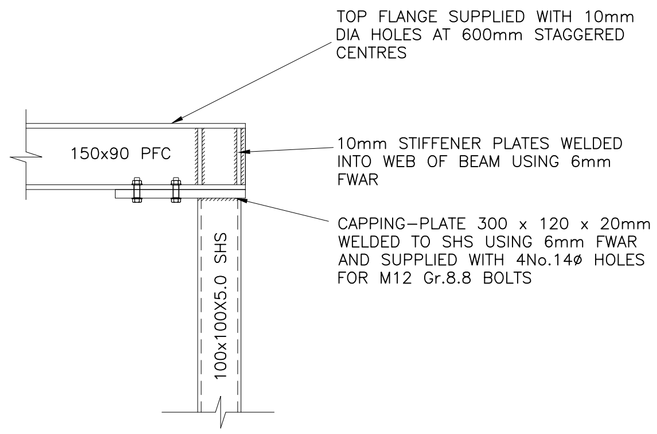

CAPPING PLATE DETAIL
SCALE 1:10

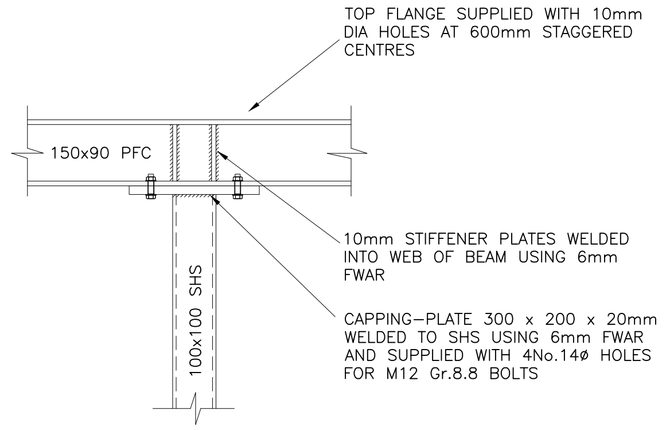

CAPPING PLATE DETAIL – MID SPAN
SCALE 1:10

REFERENCE DRAWINGS

REV	DATE	REVISION	OR	REVIEW

Orange Key
Unit 4,The Cuttings
120 High Street, Hungerford
Berkshire, RG17 0LU
Tel: (01488) 682918
E-mail: info@orangekeyltd.co.uk

Client
THE CROFT BUILDING

Project
20 THE CROFT
HUNGERFORD
RG17 0HY

Title
PROPOSED SECTIONS AND DETAILS

SPECIFICATION

Scale	Date
AS SHOWN @ A1	APR '17
Originator: MN	Reviewed By

Drawing number: 16074/102
Rev.: P1

PRELIMINARY - SUBJECT TO BC APPROVAL

ORIGINAL SCALE 0–100mm