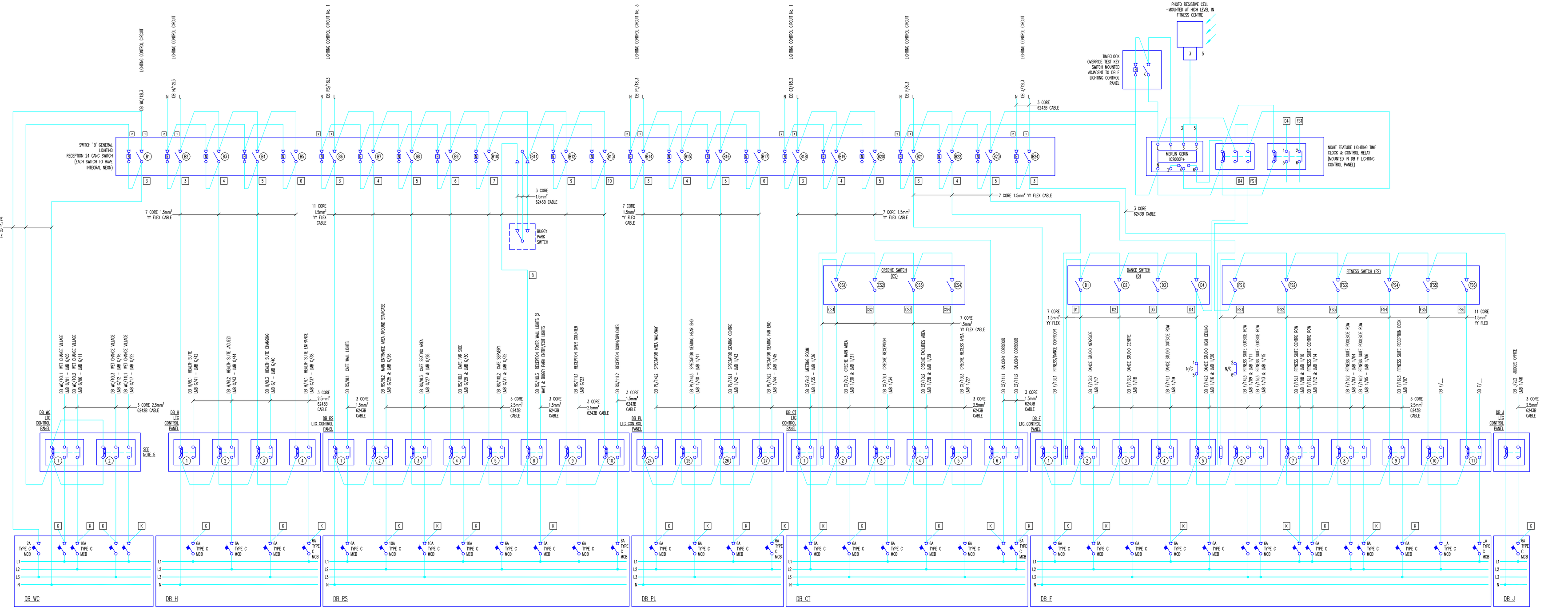

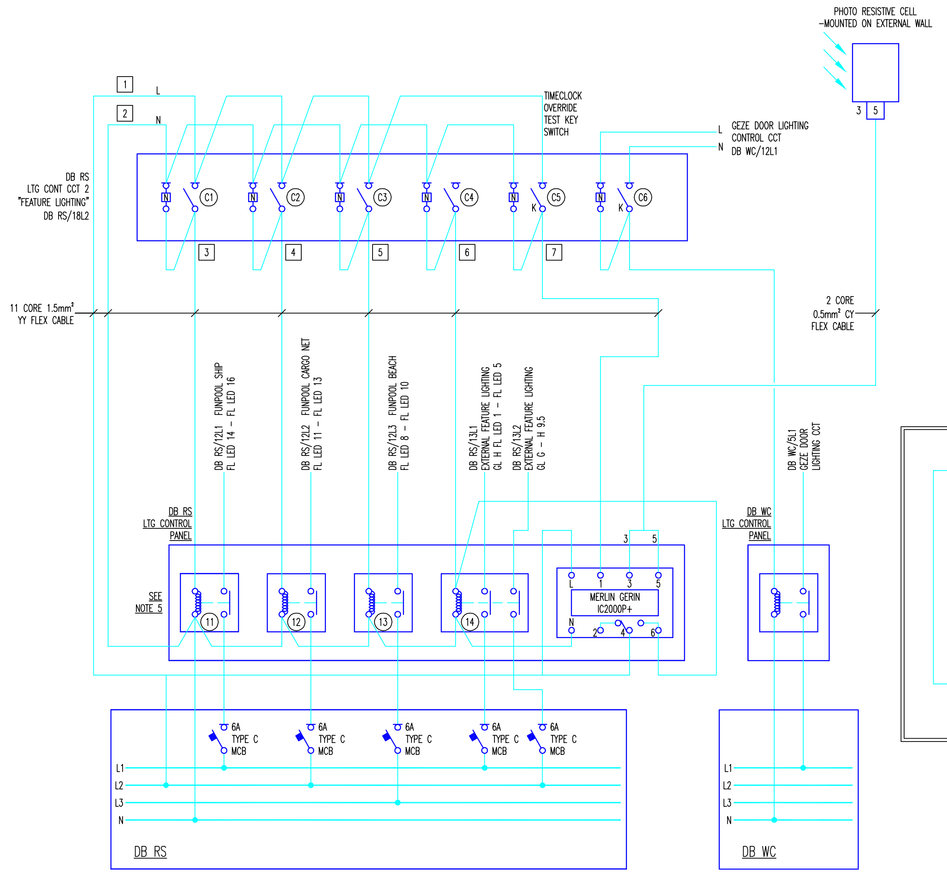

Switch B - General Lighting				
B1	Wet Changing Village			Zone 6
B2	Health Suite			Zone 7
B3	Health Suite	Jacuzzi		Zone 7
B4	Health Suite	Changing		Zone 7
B5	Health Suite	Entrance		Zone 7
B6	Café	Wall Lights		Zone 8
B7	Main Entrance	Staircase		Zone 8
B8	Café	Seating Area		Zone 8
B9	Café	Far Side		Zone 8
B10	Café	Servery		Zone 8
B11	Entrance/Reception	Foyer Wall Lights	2 way switch from entrance	Zone 8
B12	Reception	Over counter		Zone 8
B13	Entrance/Foyer	Up / Down Lights		Zone 9
B14	Spectator Area	Walkway		Zone 9

Switch B - General Lighting				
B15	Spectator Seating	Near End		Zone 11
B16	Spectator Seating	Centre		Zone 11
B17	Spectator Seating	Far End		Zone 11
B18	Meeting Room	Master Switch	4 gang switch in room	Zone 13
B19	Crèche	Master Switch	4 gang switch in room	Zone 14
B20	Balcony Corridor	First Floor		Zone 12
B21	Fitness/Dance Corridor	First Floor		Zone 12
B22	Dance Suite	Master Switch	4 gang switch in room	Zone 15
B23	Fitness Suite	Master Switch	6 gang switch in room	Zone 16
B24	Judges Office	Master Switch		Zone 10

Switch C – Feature Lighting		
C1	Fun Pool - Ship	RGB LED Floodlights
C2	Fun Pool - Cargo Net	RGB LED Floodlights
C3	Fun Pool - Beach	RGB LED Floodlights
C4	External Feature Lighting	RGB LED Floodlights
C5	Spare	N/A
C6	Geze Door Lighting	Spotlights

Switch D - Clocks	
D1	Clock 1 -Wet Changing
D2	Clock 2

Outstation OS1 - Scene Setting		
	Outside	Inside
1	Gold	Yellow / Green
2	Magenta	Magenta / Yellow
3	Green	Red / Blue
4	Red	Sea / Rose
5	Steel Blue	Gold / Magenta
6	Slow Saturate Chase	Rainbow Chase
7	Slow Saturate Chase	18 Colour Wave
8	Gold Wave	Blue / Yellow Wave
9	Colour Chase	Saturate Colour & White Wave
10	Gold & White Bump	Saturate Colour & White Wave
11	White	White
12	Off	Off

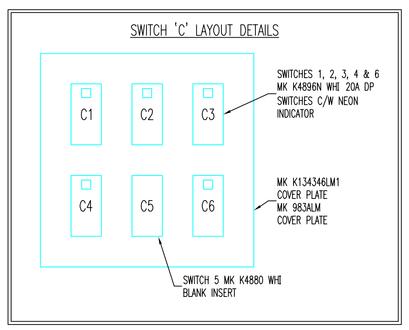

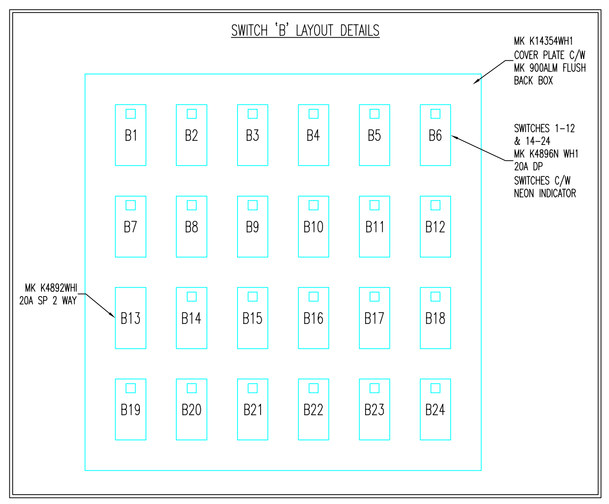

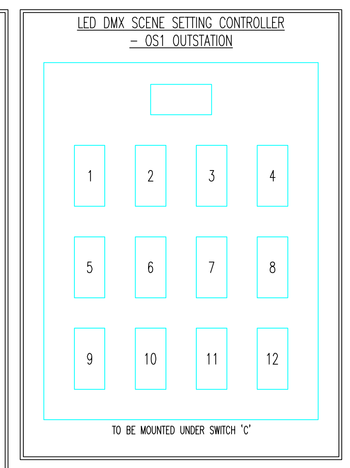

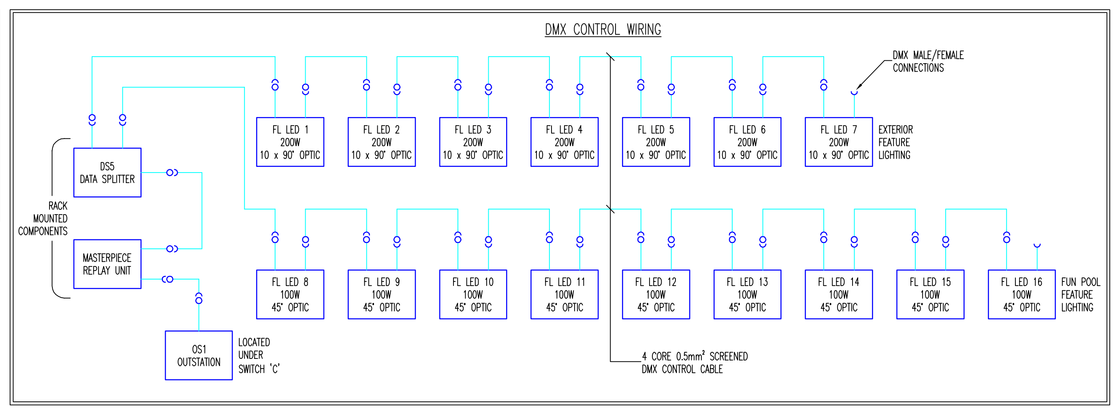

LEGEND

K — MK 4917 EL WHI 20A DP EMERGENCY LIGHTING KEY TEST SWITCH

© DERRY BUILDING SERVICES LIMITED

This drawing is the property of Derry Building Services Limited. Copyright is reserved by them and the drawing is issued on the condition that it is not copied, reproduced, retained or disclosed to any unauthorised person, either wholly or in part without the consent in writing of Derry Building Services Ltd.

Notes:

1. DO NOT SCALE THIS DRAWING.
2. DO NOT ALTER BY HAND.
3. THIS DRAWING IS TO BE READ IN CONJUNCTION WITH ALL OTHER RELEVANT DRAWINGS AND SPECIFICATIONS.
4. ALL DIMENSIONS ARE IN MILLIMETRES UNLESS STATED OTHERWISE.
5. PHASE & NEUTRAL CONDUCTORS ARE TO BE SWITCHED BY CONTACTORS
6. CONTACTORS ARE MG 15962 25A 4 POLE N/O 220-240V
7. REFER TO DRAWING 106-E-061 FOR LIGHTING CONTROL CONTACTOR DETAILS ETC.

Rev:	Amendments	By	Date
As Inst.	As Installed Issue.	CAT	20/07/09

Drawing Status: As Installed	Approval Status: N/A
Drawn By: C. Tomlinson	Engineer: R. Dawson
Primary Scale: N.T.S.	Size: A0
Date Created: June 2009	Drawing Number: 106-E-062
Revision: AI	

Project: Corby East Midlands International Swimming Pool

Title: Lighting Control Schematic General & Feature Lighting

derry BUILDING SERVICES
ESTABLISHED SINCE 1753
Sam Derry House,
London Road,
NEWARK, NOTTS, NG24 1JP
Tel: 01636 614300 Fax: 01636 605387
Email: design@derry-bs.co.uk